OWNERS AND SERVICE MANUAL

INNOVATIVE CONCEPTS IN ENTERTAINMENT INC.

10123 MAIN STREET, CLARENCE, NY 14031
SERVICE: 1-716-759-0360
FAX: 1-716-759-0884
E-MAIL: service@icegame.com
WEBSITE: www.icegame.com

TABLE OF CONTENTS

Safety and Warnings	3
Game Introduction	4
Setup	5
Adjust Volume	6
Access Programming	
Access Meters	
Reset Fault Messages	
Card Swipe Install	7
Hopper Jams & Adjustments	8
Alarm Codes	9
Hopper Removal	10
Power Supplies	11
AC Power Input	
Monitor Removal	12
Teflon Bar Replacement	
Elevator Repair	13
Playfield Removal and Cleaning	14
Theory of Operation	15 - 23
Assemblies	
Elevator	24
Buckets	25
Diverter	26
Playfield	27
Spare Parts	28
Warranty	29

SAFETY AND WARNINGS

BEFORE YOU BEGIN

WARNING: WHEN INSTALLING THIS GAME, A GROUNDED A.C. RECEPTACLE MUST BE USED. FAILURE TO DO SO COULD RESULT IN INJURY TO YOURSELF OR OTHERS. FAILURE TO USE A GROUNDED RECEPTACLE COULD ALSO CAUSE IMPROPER GAME OPERATION, OR DAMAGE TO THE ELECTRONICS. DO NOT DEFEAT OR REMOVE THE GROUNDING PRONG ON THE POWER CORD FOR THE SAME REASON AS GIVEN ABOVE. USING AN IMPROPERLY GROUNDED GAME COULD VOID YOUR WARRANTY. HAVE A QUALIFIED ELECTRICIAN CHECK YOUR A.C. RECEPTACLE TO BE SURE THE GROUND IS FUNCTIONING PROPERLY. DO NOT WASH YOUR GAME WITH A PRESSURE WASHER.

AVERTISSEMENT: lors de l'installation de ce jeu, la terre AC récipient doit être utilisé. Ne pas le faire pourrait entraîner un préjudice à vous ou à d'autres. Le non-recours à la terre récipient pourrait également causer une mauvaise opération de jeu, ou les dommages causés à l'électronique. NE PAS détériorer ou de retirer la broche de terre sur le cordon d'alimentation pour la même raison, comme indiqué ci-dessus. Indûment l'aide d'un jeu de la terre pourrait annuler votre garantie. Ont un électricien qualifié de vérifier votre récipient AC pour s'assurer que le sol fonctionne correctement. Ne lavez pas votre jeu avec une laveuse à pression.

INSTALLATION

The game comes ready to play with just a few simple things to keep in mind.

1. Plug the game into the A.C. outlet and turn on power to the game. The switch for the game is located on a power module on the outside rear of the game.

THIS GAME IS DESIGNED TO DISSIPATE STATIC ELECTRICITY THROUGH THE GROUNDING PLANE OF THE GAME. IF THE A.C. GROUND DOES NOT WORK, THE GAME COULD DISCHARGE STATIC ELECTRICITY THROUGH THE GAME CIRCUITRY, WHICH COULD CAUSE DAMAGE.

2. Make sure the game is level after installation. It is necessary to make sure the game is level for safety concerns.

3. Check that the A.C. voltage rating on the back of the game matches the A.C. voltage of your location.

THE POWER SUPPLY IS NOT VOLTAGE ADJUSTABLE. TO OPERATE THE GAME AT VOLTAGES OTHER THAN THOSE IT WAS DESIGNED FOR. PLEASE CONTACT OUR SERVICE DEPARTMENT FOR VOLTAGE CONVERSION INFORMATION.

WARNING

DO NOT remove any of the components on the main board (e.g. compact flash and eproms) while the game is powered on. This may cause permanent damage to the parts and the main board. Removing any main board component part while powered on will void the warranty.

Ne retirez pas l'un des composants sur la carte principale (par exemple Compact Flash et EPROMs), tandis que le jeu est sous tension. Cette mai causer des dommages permanents aux parties et la carte principale. Suppression de tout bord principal élément sous tension alors que annulera la garantie.

NOTE: THIS GAME IS INTENDED FOR INDOOR USE ONLY.
ON THE BACK PANEL OF THE GAME: WARNING: SHOCK HAZARD - DO NOT OPEN. REFER SERVICING TO SERVICE PERSONNEL.

REMARQUE: CE JEU EST DESTINÉ POUR USAGE À L'INTÉRIEUR SEULEMENT.
SUR LE PANNEAU ARRIÈRE DU JEU: AVERTISSEMENT: RISQUE DE CHOC - NE PAS OUVRIR. RÉPARATION À UN PERSONNEL DE SERVICE.

Game Introduction

This single-player, interactive coin pusher is the first of its kind, and features a friendly fishing theme with a eye-catching cabinet, animations and sounds. Game play appears on a stunning 26'' LCD monitor. For every coin in, a player is awarded a pre-determined amount of shots (we recommend for every .25c in, a player be awarded 5 shots, .50c game would be 10 shots, $1.00 game would be 20 shots, and so forth). Players have the ability to have their coins enter from either the right side of the machine or the left. Floating sea creatures, with various ticket values, along with a bonus treasure chest appear on the animated screen. If a player is successful in a direct hit (when their coin hits a sea creature in the target area), then they are rewarded the corresponding ticket value. When a player is successful in striking the treasure chest in the zone, this causes a "splash down" affect: a frenzy of coins are automatically dispensed onto the play field at a rapid pace. Multiple coins in the game encourage rapid fire. Game Dimensions are as follows, height is 82", width is 29", and the length is 38"

Programming

It is recommended to set your game according to our suggestive settings. The follow is a explanation of the different options used in the game. See "Access Program Settings" for instructions on entering program mode.

Payout % (Scr 150%) :*Note, Scr value is not valid only the number after the arrows is the true payout percentage*.

When the playfield is properly floated, on average every coin in will result in one coin over the edge. The game will use both screen objects (fish, treasure chest) and coins over the edge to adjust its payout percentage. The following items effect the way the payout % works.

The coins or tokens within the game have a Shot Value which is less than the Coin of Play. e.g. a 25 cent coin in will give 5 shots, so the Shot Value is 5cents. When a coin of value 5 cents falls over the edge, the value of the tickets issues should be less than 5 cents. e.g. Tickets per Coin Over Edge may be set to 1, which is 1 cent worth of tickets. This means the '5 cents' coin has become 1 cent of tickets, a Ticket % of 20%.

With our set value of 40% payout the remaining 20% is from the screen. The CPU controls the fish and treasure bonus values which are the screen elements. It pays it in two ways:

1) Sea Creatures value (1 to 20 tickets) at random values.
2) Bonus Treasure with splash down. Splash value of 15 coins equals 15 over the edge or 15 tickets.

Cost of Game
This setting determines the cost of play.

Coin in Value
This setting determines the value of your coin.

Shot Value
This setting determines how many shots per game you will give the player.

Ticket Value
This setting determines the value of your ticket.

Tickets/Coin Over Edge
This setting determines what value to give the coins that fall over the edge..

Just For Playing Tickets
This setting allows you to award tickets for just playing.

Treasure Active Time
This setting allows you to change how long the treasure chest stays active.

Bucket Level
This setting allows you to adjust how many coins load into the elevator's bucket before lifting to the top.

SETUP

USE ONLY THE COINS PROVIDED WITH THE GAME!

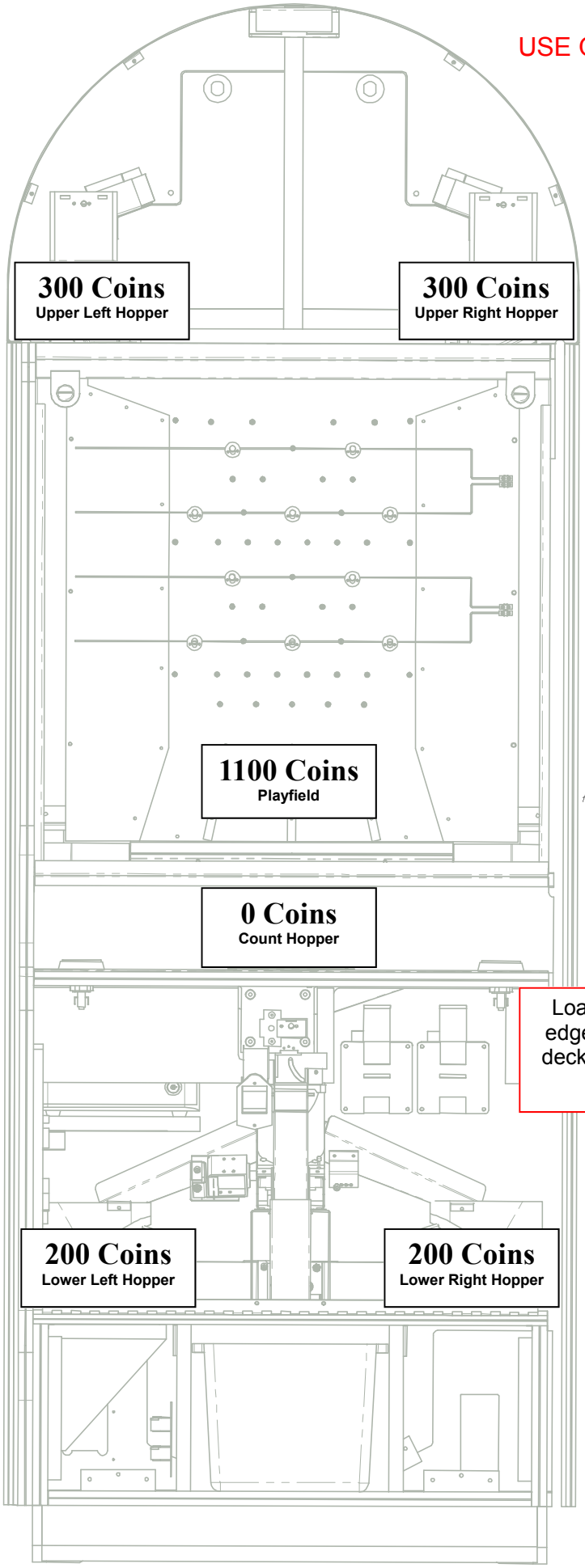

Deep Sea Float Instructions:

Step 1: Remove both upper and lower back doors.

Step 2: Dump 200 coins into each lower hoppers.

Step 3: Dump 300 coins into each upper hoppers.

Step 4: Insert tokens into the "over the edge" ridge.

Step 5: Replace back panels and power game on.

Step 6: Dump a handful of coins at a time onto the upper deck behind the plastic edge scraper allowing the upper deck to push the coins onto the playfield until all 1100 coins are floated onto the playfield. Do not directly dump the coins onto the playfield or onto the upper deck.

Step 8: Open front panel and load tickets.

Alarm sound will activate if no tickets are loaded. To quiet alarm, flip service switch to the up position. Be sure to return switch to the down position before closing front door.

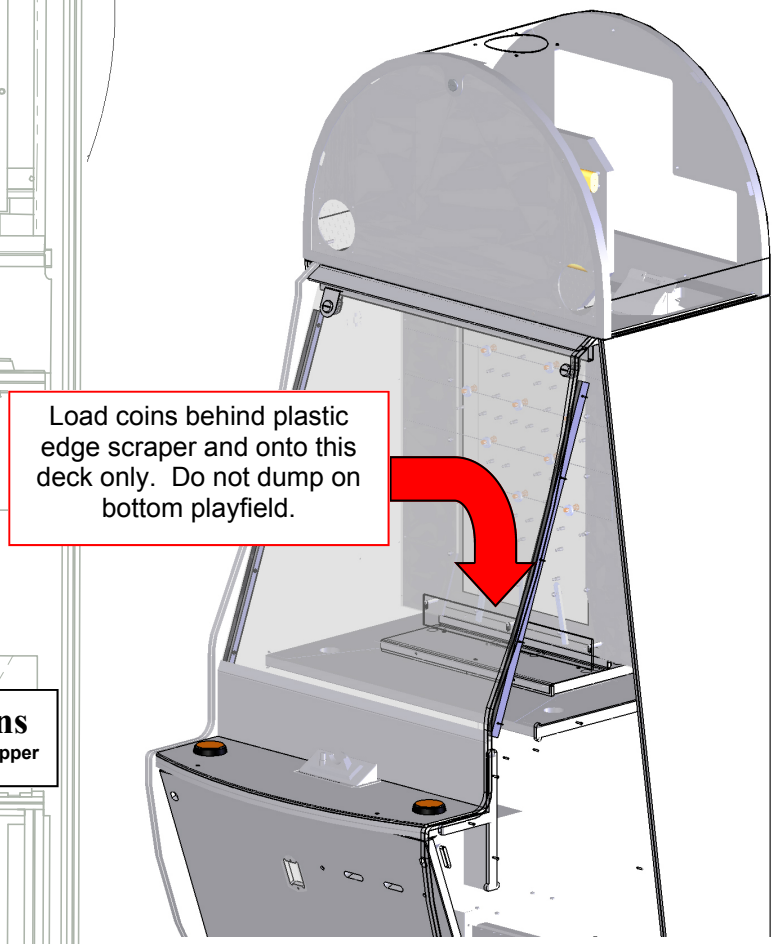

Adjusting the Volume Level:

A small amplifier is located in the back of the game. On the amplifier there is a small knob that controls the level of the volume. This know is located at the bottom of the amplifier. Turn this knob clockwise until the desired leveled is reached.

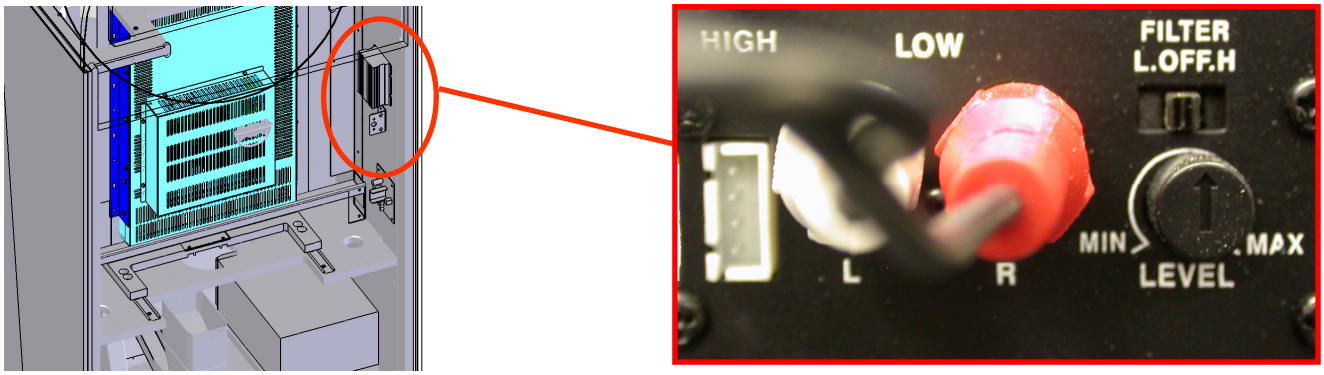

Access Program Settings:

The program toggle switch is accessed through the front of the game. Lower the front door to gain access to the toggle switch. The switch needs to be flipped to the down position to enter program mode. Next to the toggle switch are three additional buttons that allow you to select and change the different options available. Refer to the program insert for detailed information on the settings of the game.

Access Meters:

The Meters are located on top of the program panel assembly located in the front of the game. Lower the front door to gain access to them. See below for location.

Reset Fault Messages:

When the game displays a error message it might be necessary to press the “Fault Reset” button located on the side of the program console that is shown below after the fault has been fixed. Ticket errors messages should clear and the dispensers re-run after tickets are re-loaded. If after replacing tickets they do not dispense tickets, press the “Fault Reset” button.

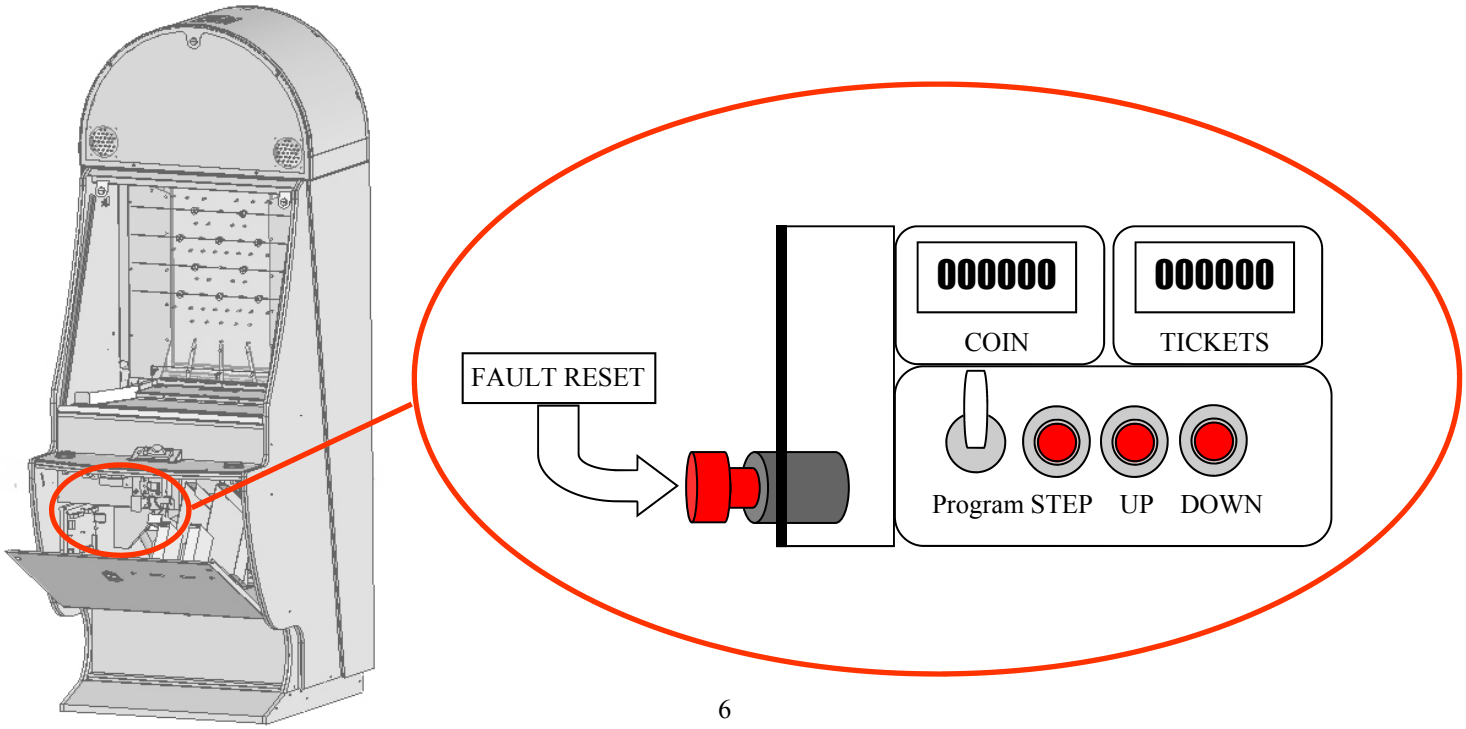

Card swipe installation

There are many card swipe systems available today. The following information is general and you should refer to your installation instructions that has been included with your card swipe system for specific details. The coin acceptor top assembly is attached to the control panel with two Allen bolts. These will need to be removed, see figure A for location of the Allen bolts. Install a cover plate to block the hole in the control panel. The coin switch will need to be hooked up to your card swipe system to inform the game to start when a card is swiped and accepted. Most card swipe systems use a Normally open relay to accomplish this. The coin switch has two wires connected to it, one being a ground and the other the coin line. Connect the coin line to one side of the normally open relay connection on your card swipe unit and then connect the ground wire from the coin switch to the other side of it. Now when the relay is activated, it will connect the coin line to ground just like the coin switch would and give the game a credit.

This game has two ticket dispensers but uses a single meter to count the tickets paid out. It is recommended to splice into the meter lines. The red wire has a constant 12 volts of DC current to it and the black wire is switched to ground for every ticket that is dispensed. Be sure when splicing your card reader to the meter that you match the “+ meter” label to the red wire and the “- meter” label to the black wire. See below for details.

On some card systems the coin meter also needs to be spliced into. The red wire has a constant 12 volts of DC and the black wire is switched to ground for every coin accepted. Be sure when splicing your card reader to the coin meter that you match the “+ meter” label to the red wire and the “- meter” label to the black wire. See below for details.

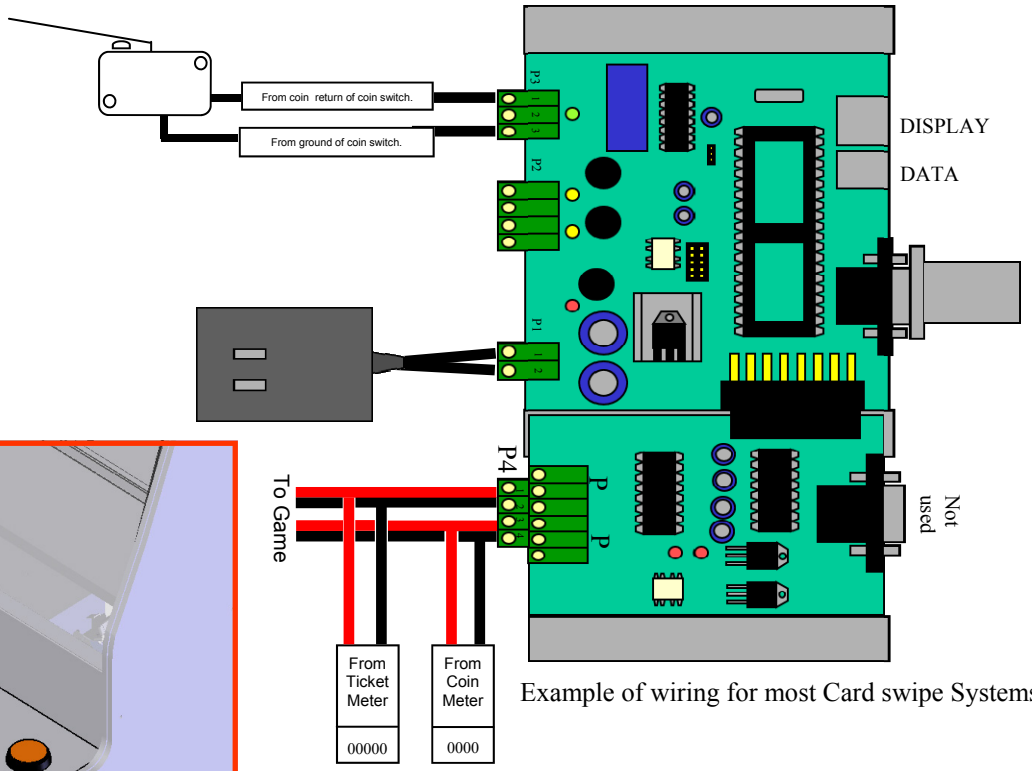

Example of wiring for most Card swipe Systems

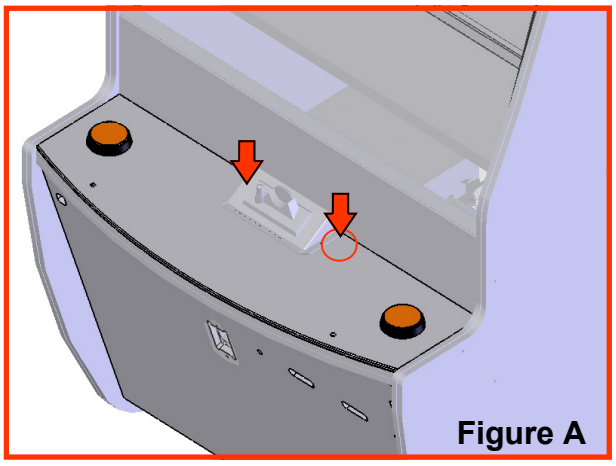

Figure A

Hopper Jams and Adjustments

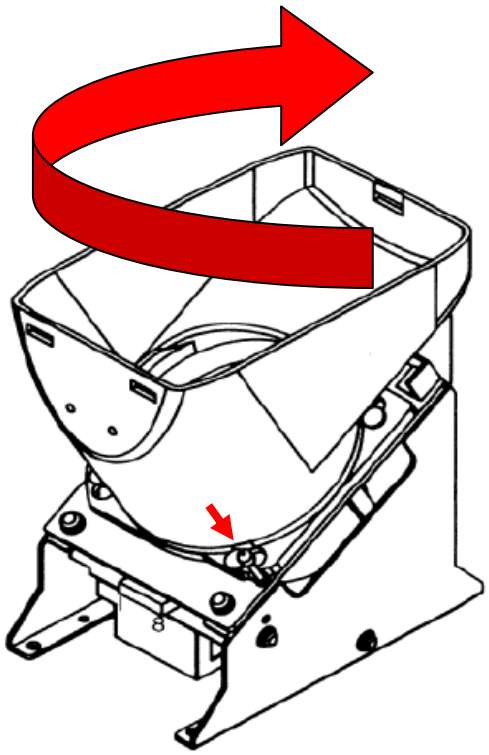

Hopper Jams

Although the game is designed to be as trouble free as possible a coin jam can occur in any of the hoppers. This can happen if a foreign object falls into the hopper itself or a coin has become defective. The game will alert you to which hopper has the coin jam. The upper hoppers have a high capacity extension installed that allows more coins to be present. They also have additional wiring to detect hoppers that will over flow. Disconnect these wires prior to removing the hopper bowl. The hopper is a two piece unit. The bottom assembly is attached to the cabinet while the top called the bowl is designed to be twisted and removed. It is recommend to remove as many coins as possible before removing the hopper bowl. To twist the hopper bowl off you have to press down the release button shown with the down arrow and then twist the bowl clockwise. Once the foreign object has been removed check the spacing of the wheel and the coin out so that only one coin will exit when the hopper is ran. See below for details. To replace the bowl, twist counter-clockwise until it “snaps” back in.

Hopper Adjustments

After a hopper jam has occurred the gap between the disc and the lower assembly might have to be adjusted. Remove the hopper following the “Hopper Removal Instructions” and one coin from one of the hoppers. Slide the coin as shown below and adjust the gap adjusting screw until the height of the wheel is within the specs listed below.

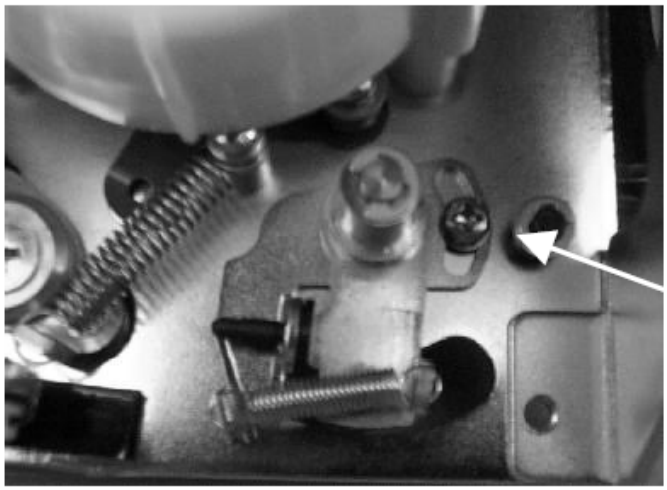

Roller Gap
Adjusting Screw

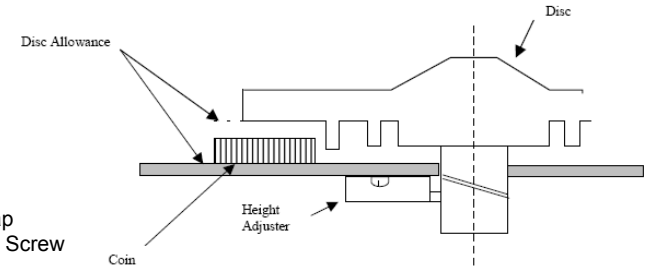

Coin Thickness	Disc Allowance
1.3mm - 1.9mm	Coin Thickness + 0.2mm - 0.5mm
1.9mm - 2.4mm	Coin Thickness + 0.3mm - 0.7mm
2.4mm - 3.1mm	Coin Thickness + 0.4mm - 0.9mm

Alarm Codes and their meaning.

Upper Left and Right Hopper Errors:

Empty

Solution: This error is caused when the hopper has no coins. Check Elevator for proper operation.

Jam

Solution: This error is caused when the hopper is unable to dispense coins. Check for possible foreign object or defective coins. See “hopper removal” sections for more details.

Lower Left and Right Hopper Errors:

Empty

Solution: This error is caused when the hopper has no coins. Check count hopper and diverter assembly for proper operation.

Jam

Solution: This error is caused when the hopper is unable to dispense coins. Check for possible foreign object or defective coins. See “hopper removal” sections for more details.

Count Hopper Errors:

Full

Solution: This error is caused when too many coins fall into the count hopper. It should continue to count the coins and dispense the coins to either the left or right lower hoppers. It should clear the error itself.

Jam

Solution: This error is caused when the hopper is unable to dispense coins. Check for possible foreign object or defective coins. See “hopper removal” sections for more details.

Logic Alarm & Pin Sensor - USB Link Faults

Solution: These errors are caused when the either the main I/O board or Pin sensor board looses communication with the computer. This is either caused by the defective USB cable or missing +24 volt DC power to the I/O board.

Pin Stuck Error

Solution: This error is caused when the target pins break or are stuck. Repair pin.

Lift Arm - Slow or limited Fault Error

Solution: This error is caused when the elevator is not in its home position. Check for proper Operation of the elevator system. See “Theory of Operation” for more details.

Hopper Alarm - Ticket 1 or 2 Empty or Faulty Error

Solution: Check tickets and refill if necessary. Press “fault reset” button.

Stop tilting and banging me. Stop trying to Cheat Error

Solution: This error occurs when either the tilt sensor or bobby sensor is triggered. Check for proper operation of both sensors.

Logic Alarm - CPU/Power Fault Error

Solution: This error occurs when power is loss for a brief period on the main logic board. Check for possible brown out conditions.

Hopper Removal Instructions

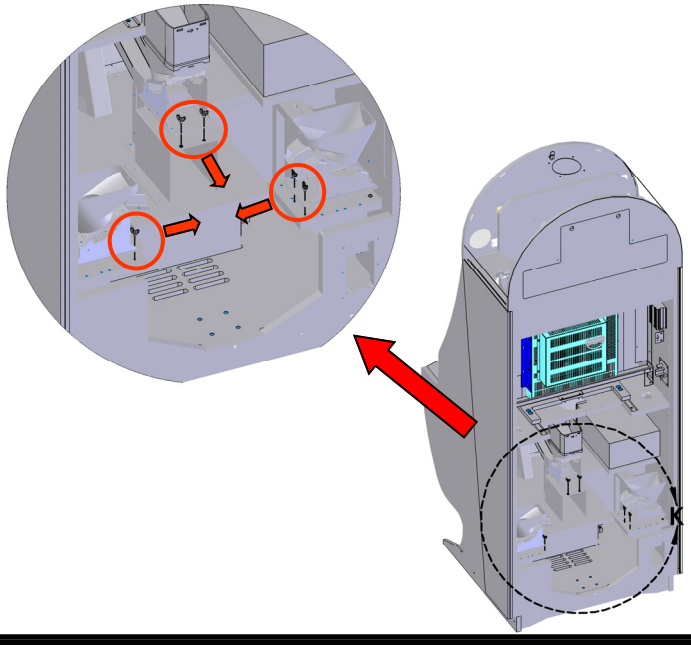

Lower Hopper Removal

There are three lower hoppers. They are Left, Right, and Count. They are accessed through the bottom access door. Remove the bottom access door. The count hopper has a diverter assembly attached that will have to be removed first before the hopper itself can. Refer to the section titled “Diverter Removal”. Two wing nuts secure each hopper to the game. Remove the wing nuts and slide the hoppers out.

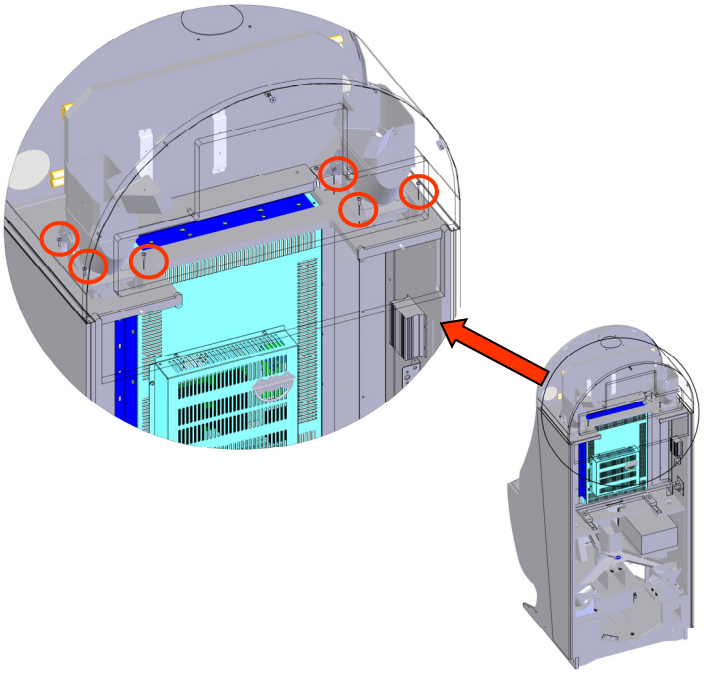

Upper Hopper Removal

The upper hoppers are accessed from the top access door. Remove the top access panel. Each hopper assembly has two wires connected to them. These are used to sense when the hoppers are full. They will need to be disconnected before removing the hopper. Four mounting bolts hold the hopper to the base. They are shown below. The fourth bolt on each hopper are behind the hopper itself and is not shown below. Remove the four bolts and disconnect the main hopper wire harness.

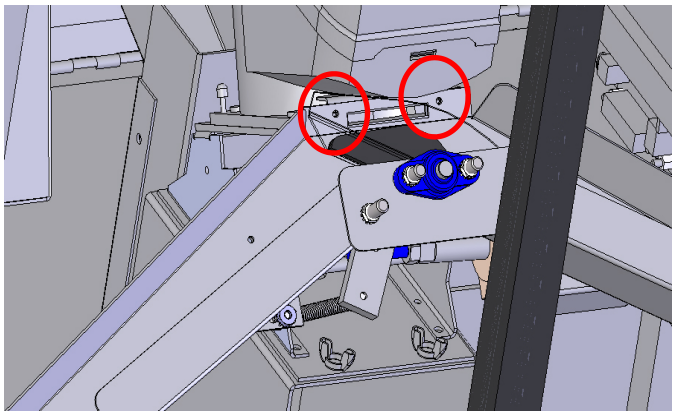

Diverter Removal

There are two bolts that hold the diverter assembly to the count hopper. You cannot access both bolts at once so you will have to toggle the position of the flipper to the opposite side when you remove that’s sides bolt. The picture shows the flipper transparent for clarity.

Power supply Removal

There are three power supplies used in this game. Figure A shows the +24 volt DC supply used only for the monitor. Figures B and C show the +12 and +24 volt DC power supplies used for the rest of the game. There is no +5 volt DC power supply used in this game because each board that requires it has its own 5 volt regulator. See “Theory of Operation” for more details.

To access the monitor’s power supply remove the top marquee access door. Disconnect the wiring and remove the four mounting screws circled in figure A.

To access the remaining power supplies, remove the bottom access door. Remove the bolt circled in figure B. Slide power supplies out together. Refer to figure C for power supplies voltage rating and mounting screws.

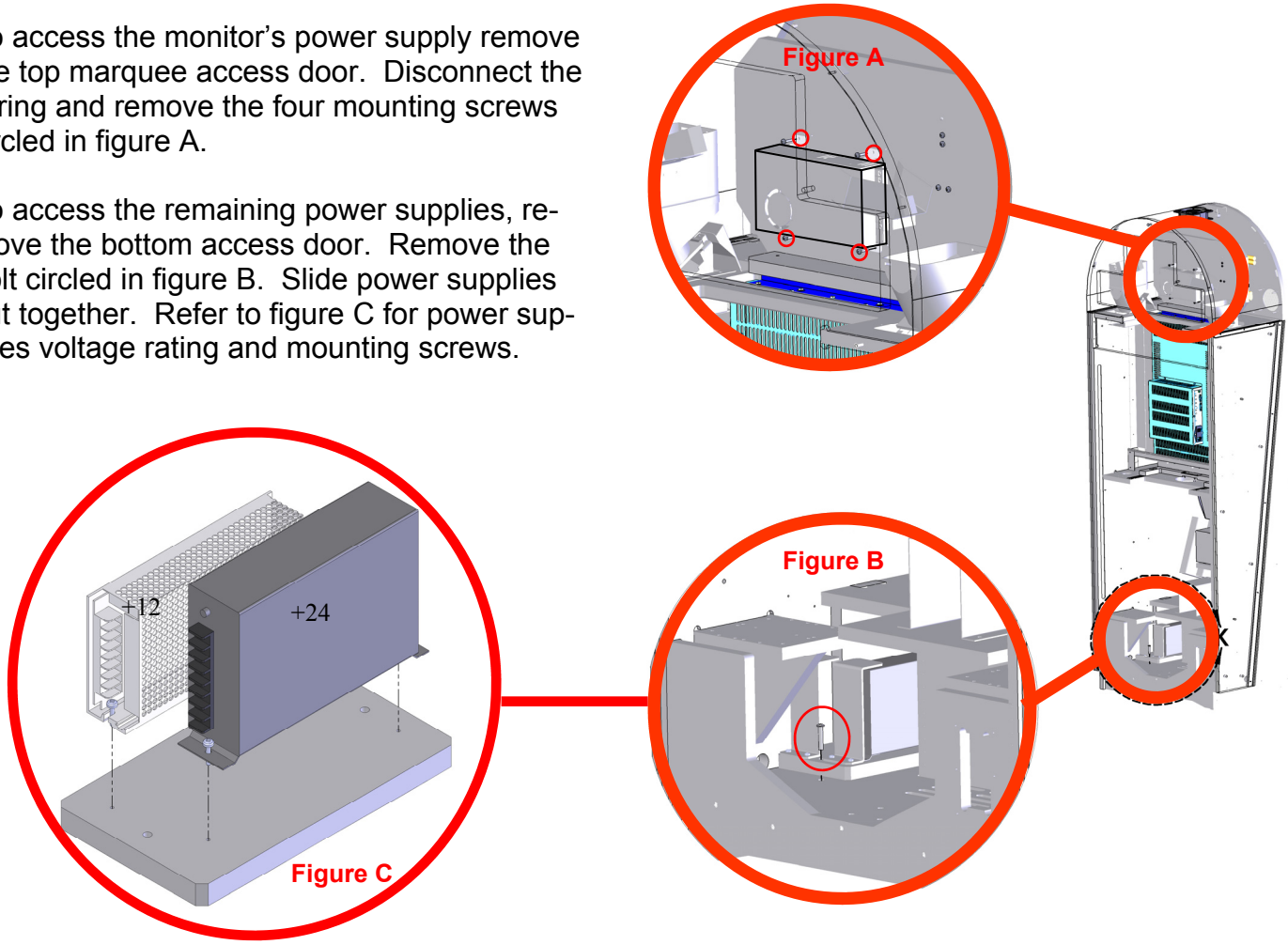

AC Power Information

The games main fuse is accessed through the back of the game at the power mod. Above the power cord is a small panel that contains the main fuse. The value of the fuse for 110 volt users is 5 AMPS at 250Volt type slow blow. The value of the fuse for 220 users is 3 AMPS at 250Volt type slow blow.

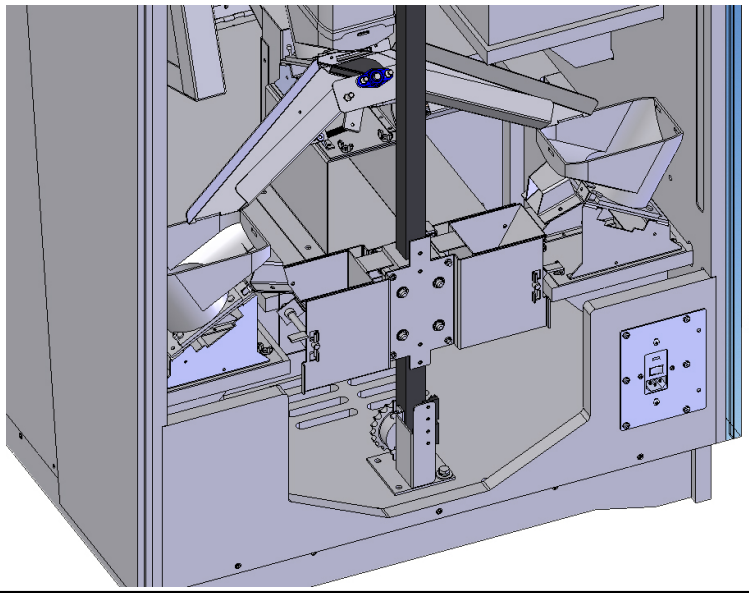

Monitor removal

Remove both back panels of game. Remove the front glass. Disconnect DVI cable and DC power cable to the LCD panel. Remove the two circled bolts that hold the monitor mounting bracket shown in figure A. From the front of the game, lift the monitor up and tilt the bottom out toward you. Slide the panel completely out of the cabinet. See pictures below. The LCD panel used in this game has one side of its mounting brackets removed. This is so that when you install the monitor back in you must insert the bottom Pem studs into the side of the LCD monitor where the bracket would have been mounted.

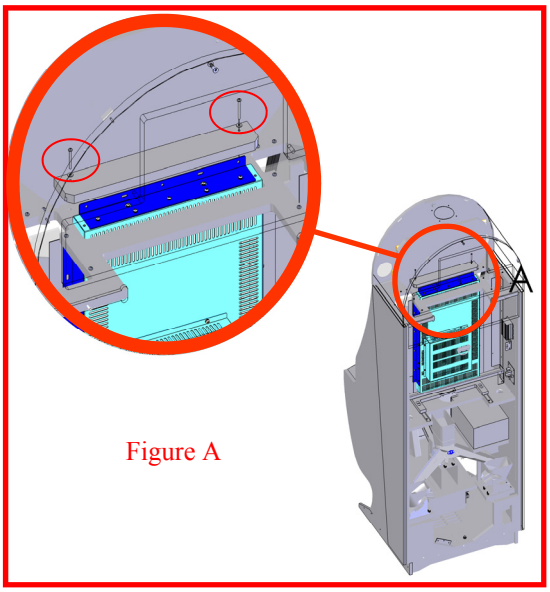

Figure A

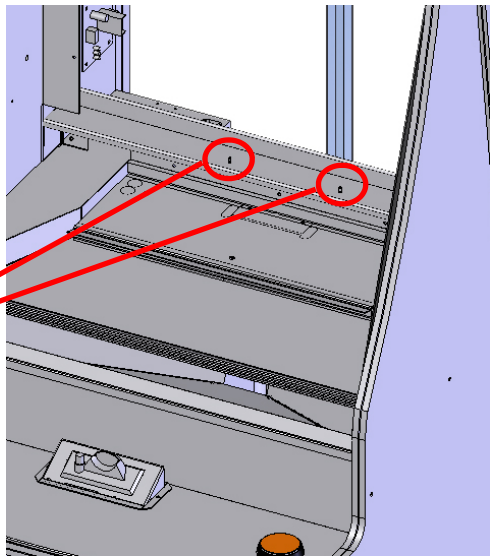

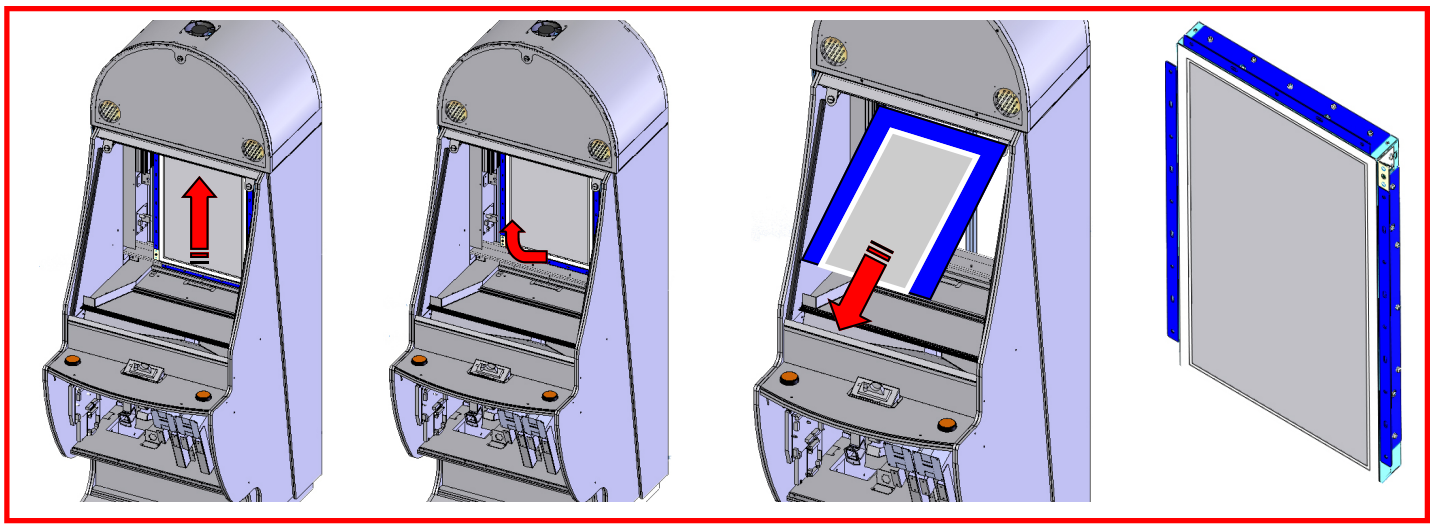

Teflon Bar Replacement

The Teflon bar can be replaced without removing the playfield. It is accessed through the back of the game and behind the playfield. Remove the lower back panel. Remove the three nuts shown. The Teflon bar can now be replaced. It is important that the bar when installed can freely move. The figure shows the playfield out for clarity.

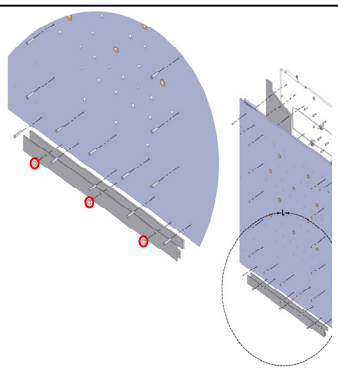

Elevator motor removal

The motor is accessed from the top marquee access panel but both back panels must be removed in order to replace the motor. Begin by finding the link in the chain and removing it to remove the chain. Separate the motor assembly from the elevator shaft by removing the two mounting bolts shown in Figure A. Unplug motor wire harness. Locate the two set screws that hold the gear to the motor shaft and loosen until the gear slides out. See figure B. Now remove the three mounting bolts that hold the motor to the motor bracket. See figure C. Replace in reverse.

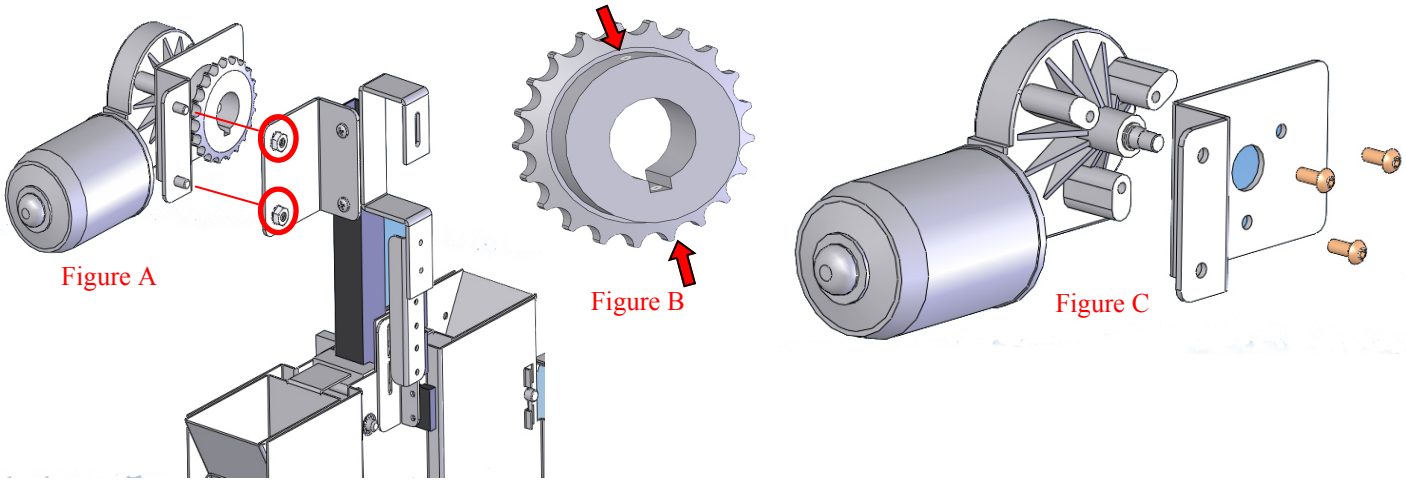

Elevator removal

The elevator is accessed from both back panels. Remove the back panels. Remove lower and upper limit switch harnesses. Remove power harness to motor. Remove lower mounting bolts as shown in figure D. Now remove the upper mounting bolt shown in figure E. The elevator can now be removed. Assemble in reverse.

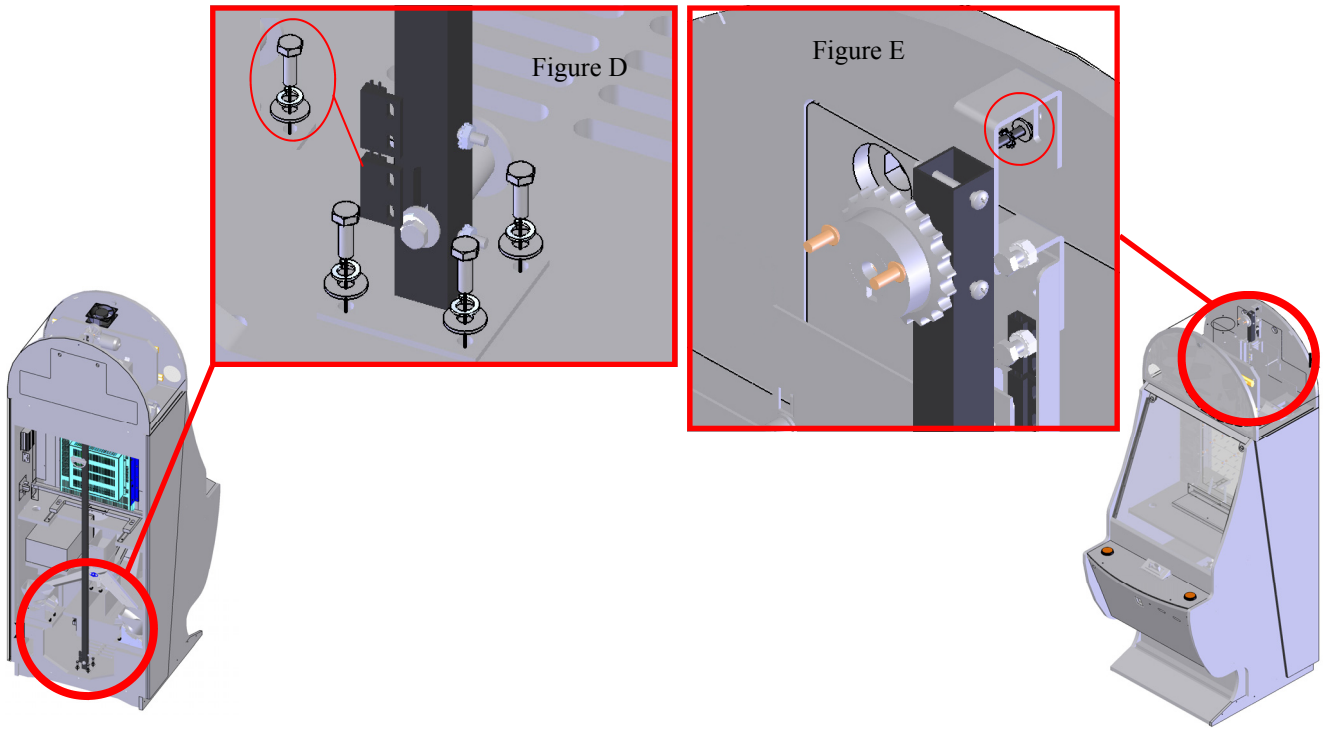

Playfield Assembly Removal

To remove the playfield from the cabinet remove the front glass and put aside. Remove the two inside covers shown in figure A by pulling straight out (they are attached with pinch brackets). There are six plastic 1/4" spacer nuts, 3 on each side, that hold the playfield to the cabinet. Remove all six. Only the left three are shown in figure B. Now pull the playfield out disconnecting the playfield harness.

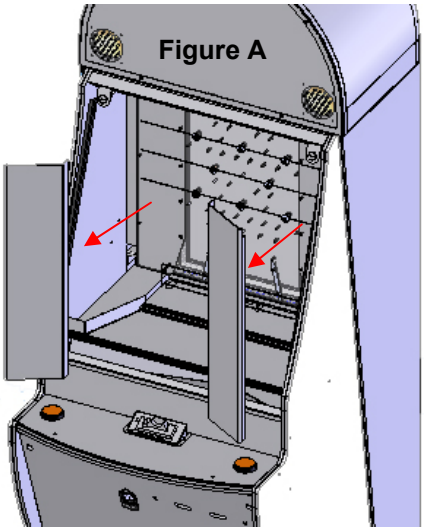

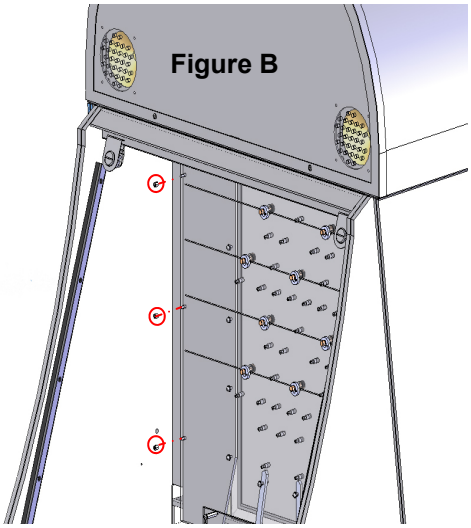

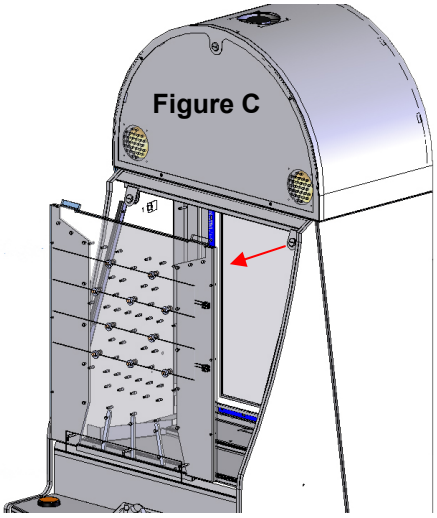

Playfield Assembly Cleaning

Over a period of time it will be necessary to clean the playfield of debris and dust that accumulates in the path of the coins. It is strongly recommended not to insert any foreign objects up into the playfield in a attempt to clean the inside plastics. Remove the bottom scraper by removing the 3 mounting screws and their standoffs as shown in figure D. Put aside. Remove the 19 Acorn nuts shown in figure E. It might be necessary to briefly heat the Acorn nuts up with a propane torch being careful not to melt the plastic. Use a plastic ant-static cleaner that contains no ammonia and a lint free cloth to clean the playfield plastics..

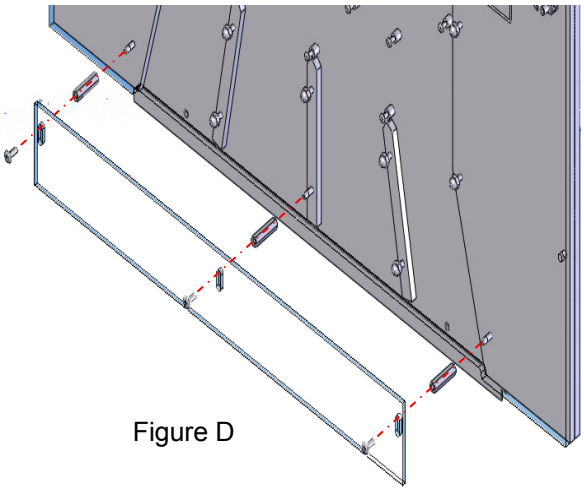

Figure D

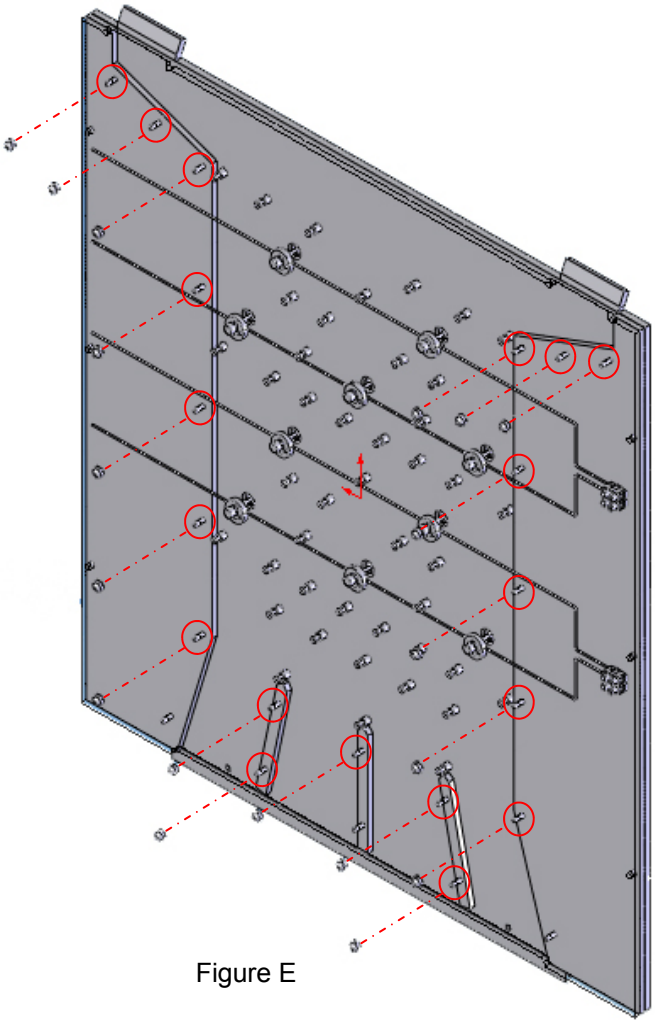

Figure E

CAUTION

This game uses complex electronic components that are very sensitive to static electricity. Observe precautions below before handling these electronics. Failure to do so may void the warranty and damage electronic assemblies.

Before servicing electronics, turn off AC power to the game. Wait for capacitors to discharge. Do not plug in the hoppers with power on.

DO NOT remove any of the components on the PCBA boards (e.g. compact flash and EPROMS) while the game is powered on. This may cause permanent damage to the parts and the main board.

Before touching or handling electronic assemblies, discharge static electricity on your body. To discharge this static, begin by connecting the line cord to a grounded outlet. Don't turn on the game. Next, touch the safety ground stud of the power supply chassis.

Store electronic assemblies in an anti-static area. Use anti-static bags to store or transport the game circuit boards.

Don't remove or connect electronic assemblies when cabinet power is on. Otherwise, you'll damage electronic assemblies and void the game's warranty.

After you complete maintenance or service, replace all ground wires, shields, safety covers and install and tighten ground and mounting screw. A bad connection to ground will result in sporadic operation of your game.

SERVICE: Theory of Operation and Repair

In the event your game is not functioning correctly please refer to the following few pages for information on how the game functions and tests that you can perform. It is recommended that when you determine that a board is found defective that a authorized warranty service center repair your PCBA. Warranty requests will be voided if repairs are attempted by unauthorized personal.

Theory of Operation:

As the player dispenses coins from any of the top hoppers the bottom hopper of that side will replace that coin into that side of the elevator bucket. Coins that fall over the edge are funneled to a center hopper known as the count hopper. They are then counted and diverted to either the left or right bottom hoppers by the diverter assembly. As the coins fill the left and right hoppers the game will begin to fill the buckets of the elevator assembly. When the elevator buckets have 75 coins in them the elevator assembly will rise to the top dumping its load back into the top left and right hoppers and the process starts again.

Elevator Assembly:

The elevator assembly is chain driven. A 24 volt DC motor is used to rotate the chain which in turn pulls the buckets up or down depending on the direction of the motor. As the buckets reach the top or bottom, a magnet switch is engaged that informs the game that the elevator has reached either the top or bottom. If this magnet fails for any reason, a second magnet switch will interrupt the signal to the motor controller which will stop the motor. This will cause a alarm to sound.

When the elevator arrives at the top, the buckets will dump its load by means of two bolts mounted at the top. After a brief period of time the elevator will return to the bottom and begin to refill with coins.

Located on the back of the game are two kill switches that will interrupt the power to both the upper pusher deck and elevator assembly. These switches must be pressed in while the back door of the cabinet is off. *Never permanently defeat these switches, they are for YOUR safety.*

SERVICE: Theory of Operation and Repair

The diverter assembly:

The function of the diverter assembly is to redirect coins to either the left or right bottom hoppers. This is done by a solenoid. The solenoid has 24 volts of DC constant to the blue wire. The ground is modulated so that the solenoid has only 12 volts at any given time when engaged. You cannot properly test for the 12 volts with most meters. Confirm that 24 volts is present to the solenoid by placing your red probe of your meter onto the blue wire and your black probe of your meter to the power supply ground. You should read +24 volts DC. Now remove the black probe of the meter and connect to the opposite side of the solenoid. As the solenoid is engaged, your meter should show the average voltage present, which is dependent on the speed of your meter.

USB MiniLogic v1.0 DNB/HLA PCBA:

The USB MiniLogic PCBA functions are to control the two ticket dispensers, coin input and coin lockout control, control the left and right side LED strips, and run the coin diverter assembly. Ticket dispenser 1 is enabled by Q10 and its return (notch) is inverted by Q11 and feed back into U1. Ticket dispenser 2 is enabled by Q12 and its return (notch) is inverted by Q13. U2 is the driver for the count hopper, coin lockout, and ticket dispenser 2. The coin input is inputted through a IN1440 for protection, pulled high with RN4 resistor pack and feed into U1. The LED left strip is enabled by Q1 and the right LED strip is enabled by Q2. Q4 enables the solenoid that controls the diverter assembly. A red LED indicates that the board is functioning with a steady flash. The Green LED is to indicate that the PC is communicating with it.

DEVHC003 (USB) Pin Sensor Rev3:

The pin sensor PCBA board function is to interpret the coins that drop from top down onto the targets. When a target is hit with a coin, its line is momentary shorted to ground. This line connects through J4. Its pulled down to ground through either C9 through C12 and then RP3, R5 or R6 depending on the target hit. It is then further pulled down to ground by either RP2 resistor pack, R3 or R4 depending on the target hit. The signal then goes through either D1 through D8 for protection and pulled up by R1 resistor pack, R1 or R2. It is then processed by the 8 bit microprocessor IC99 and outputted through IC98. IC98 provides the communication back to the PC via USB. U1 provides the +5 regulated power on pin 3 that powers the board and it is filtered through C2 and C99.

When testing the function of this PCBA, the inputs are checked against the coin in line so that if a switch is triggered without seeing a coin input it will ignore that target switch.

DEVHC008 Power DISTRO PCBA

This board distributes power the +12 volts of DC and the +24 volts of DC throughout the game. A relay delays the power on sequence when AC is first applied.

SERVICE: Theory of Operation and Repair

DEVHC002 5A Single H-Bridge PCBA:

This PCBA controller's function is to operate the elevator's motor either up or down. IC2 receives its input on pins 3 and 2 through connector "Motor & Power & Limit connector". IC2 then outputs on pins 14 and 13 to IC1 pins 5 and 7. IC1 will output on pins 2 and 3 through Bridge 1 and out to the motor. Feedback is feed through 1 ohm resistors back to pins 1 and 15 of IC1 and pin 10 of IC2. The 5 volt regulator supplies regulated power to IC2, pin 18 and IC1, pin 9. 24 volts is directly supplied to pin 4 of IC1.

Begin by verifying that +5 volts, +12 volts, and +24 volts LED are lit on the PCB. If the +24 volt LED is not lit, ensure the kill switch is not disabling it. This can be done by using a jumper wire. Do not leave this defeated as it is a safety switch to prevent serious injury to you from the elevator running without your knowledge. Locate the +24 volt supply and verify for proper operation. If the +24 volt line to the board is good and no bad wiring is found replace the H-bridge board. If the +12 volts LED is not lit, locate and check the +12 supply for proper operation. If the + 5 volt LED is not lit check for proper operation of the 5 volt regulator . Pin 3 should have +5 present. Replace if defective.

If all the LEDs are lit but the elevator still doesn't function, check pins 2 and 3 on the connector labeled "Motor & Power & Limit Connection" for voltage. Using the metal tab of the regulator as ground you should find +5 volts present on both pins 2 and 3 of the connector. If no voltages are present, follow the wiring back to the USB DEVHC004 board.

To test the function of the H-Bridge board use one probe attached to pin 3 and the other to the metal tab of the regulator, press and hold the "UP" elevator button and the pin will go to 0 volts. When you release the button, the pin will have +5 volts present. Now move your probe to pin 2 leaving the other one on the metal tab and press and hold the "down" elevator button. The pin should go to 0 volts and when you release the button the voltage will return to +5 volts. You have confirmed that the H-Bridge circuit is working and the problem lies in either the wiring to it or the other USB I/O board.

J1 (control) will have +5 volts on pins 1 and 2. Pin 3 will have +12. Pin 4 is not connected.

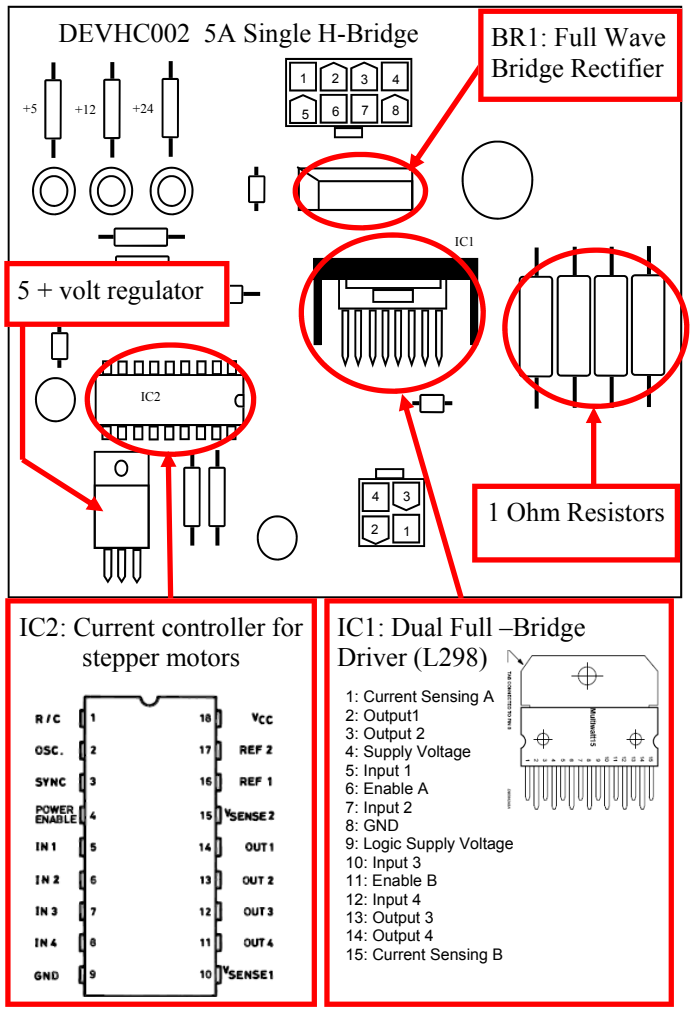

SERVICE: Theory of Operation and Repair

DEVHC004 USB Logic PCBA (DS2034X)

The functions of the DEVHC004 is to provide hopper controls to all but the count hopper (center). It decodes the launch left and right buttons and flashes them when there is a credit. It decodes the programming buttons and the service toggle switch. It decodes the tilt sensor and the slam switch. It also decodes the test “UP” and “Down” elevator buttons. It also controls the DEVHC002 H-Bridge PCBA that moves the elevator during game play and monitors the position of it. It drives the two digit LED display found on the control panel.

Both Upper and Lower hoppers control lines are controlled by U7. U7 also controls the H-Bridge PCBA board that controls the elevator assembly. U1 receives both the coin count and coins low from each hopper through protective diodes and pulled high by RP1. Refer to J6 and J4’s diagrams for voltage connections to hoppers.

U4 receives through protective diodes and pulled high by RP4 the service mode buttons Up, Down, and Step, and the toggle switch which enters programming mode.

U2 receives through protective diodes and pulled high by RP2 the test switches that move the elevator assembly up and down and when the elevator is in its home positions either up or down.

U3 receives through protective diodes and pulled high by RP3 the right and left coin launch buttons. U10 also flashes the launch buttons when a coin is present. It also advances both the ticket and coin meters.

U8 turns on Q1-Q7 to enable each segment of a LED digit display through resistor pack RP9. U9 controls which digit display to light.

Service : DEVHC004 USB **- Upper and Lower Hopper Connections**

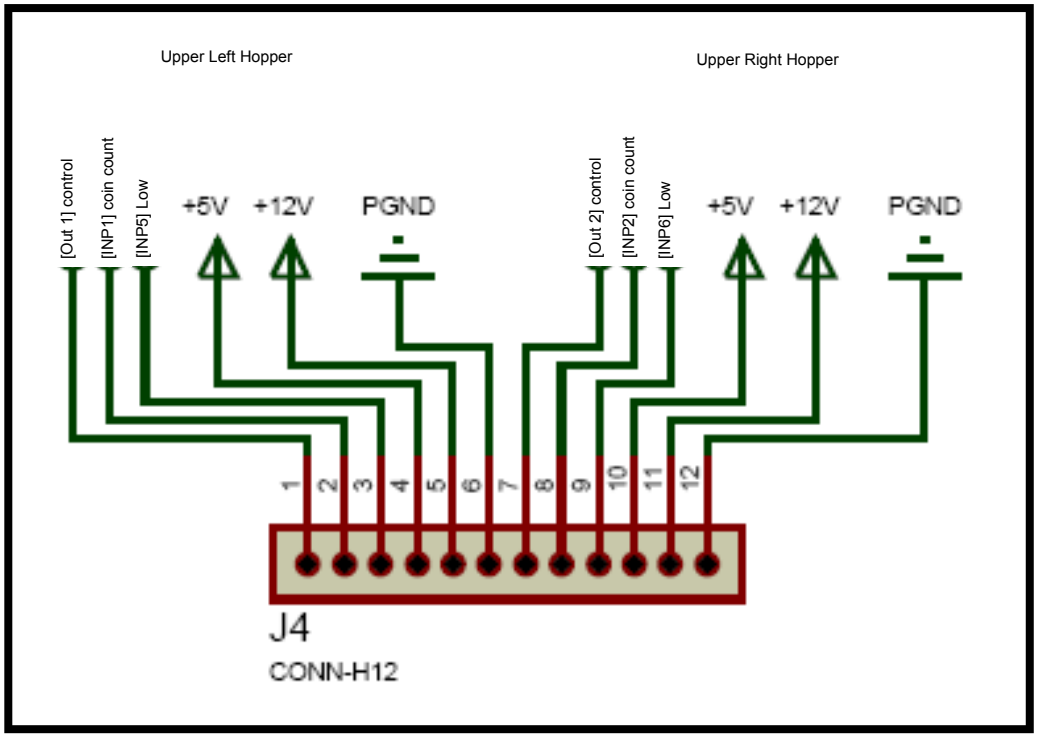

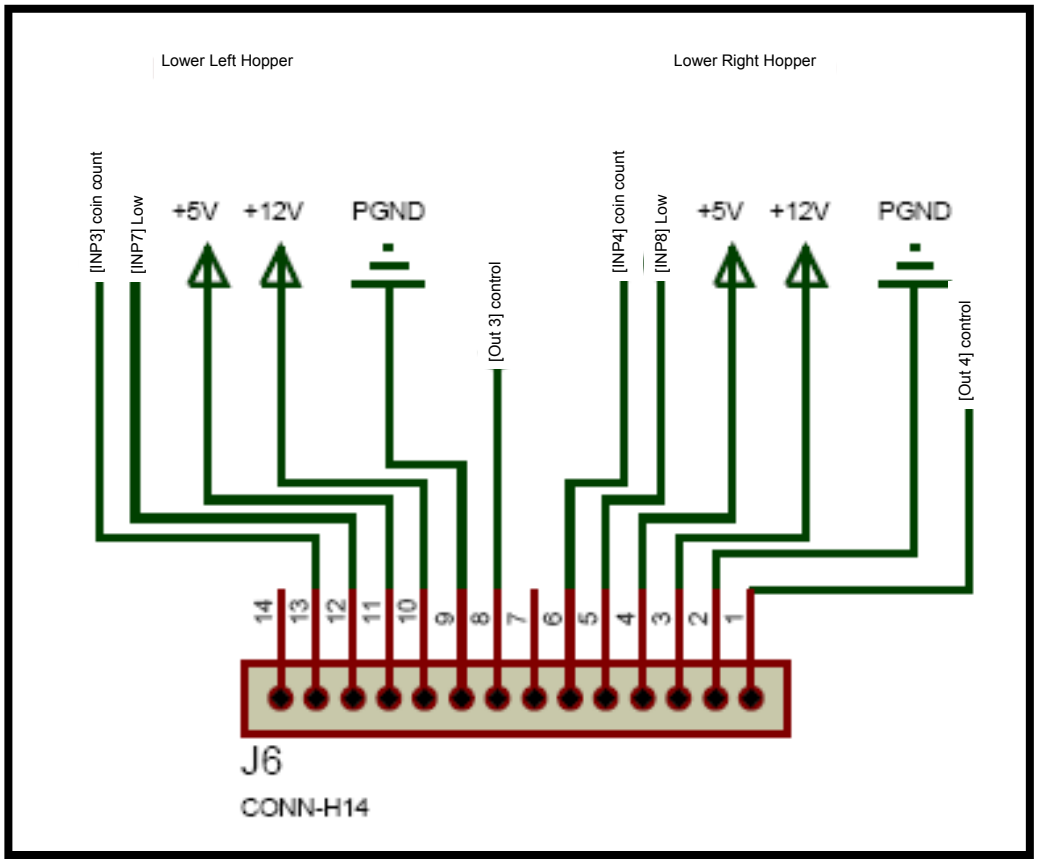

Service : DEVHC004 USB - Input Connections

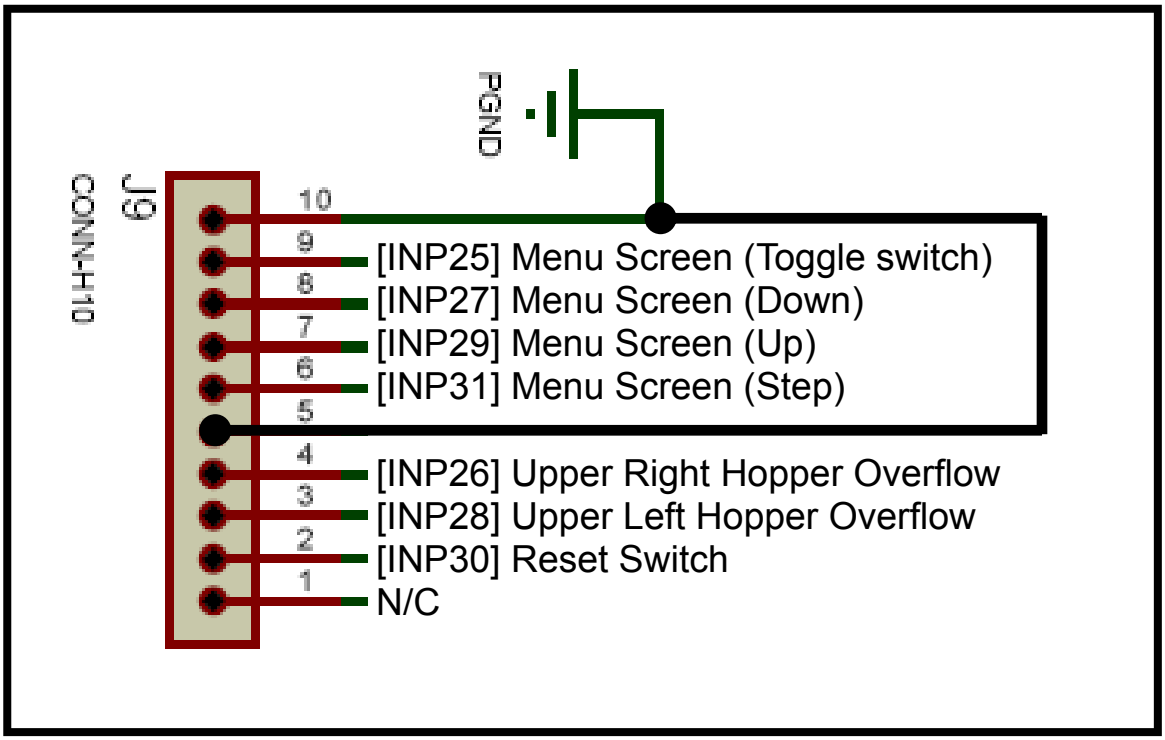

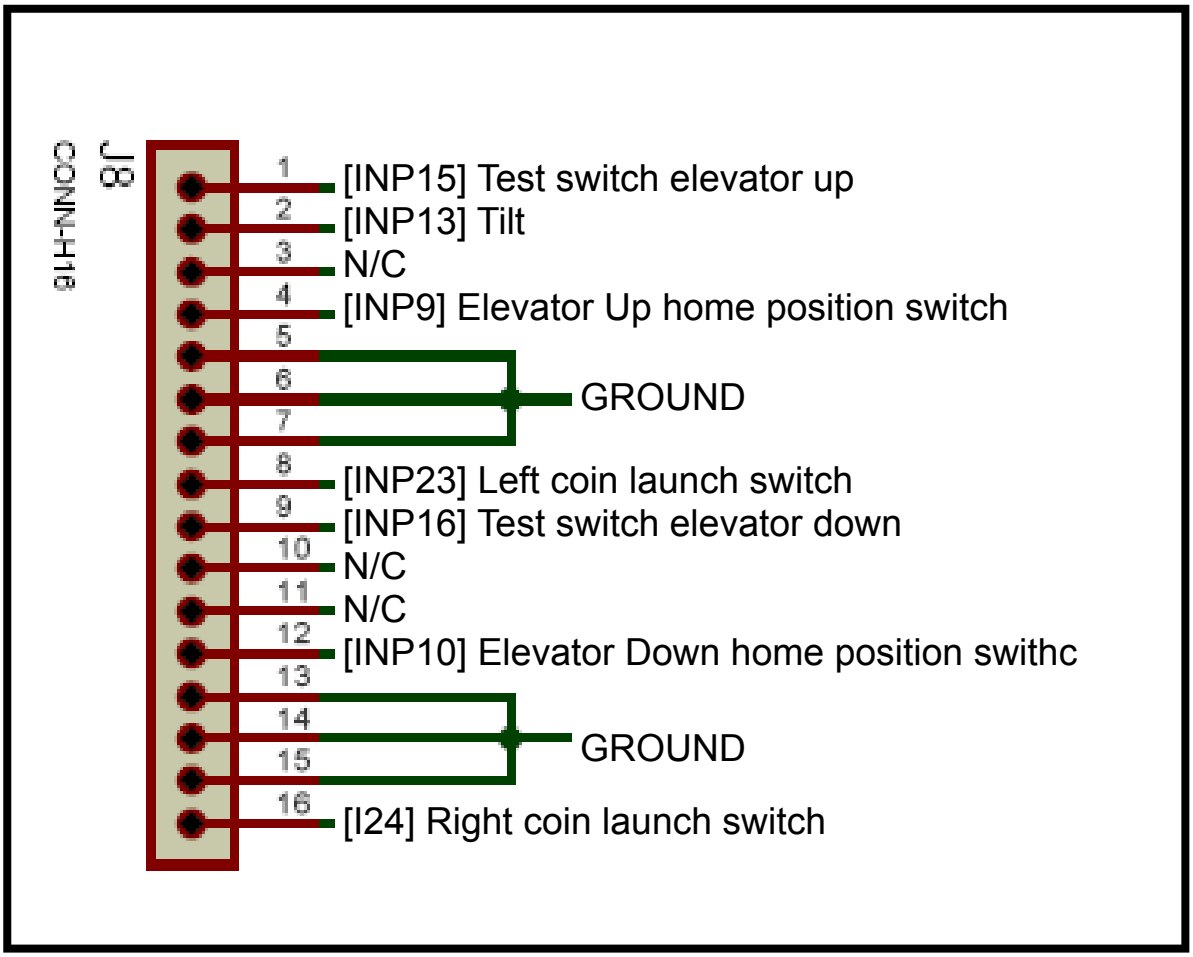

Service : DEVHC004 USB - LED Display Connections

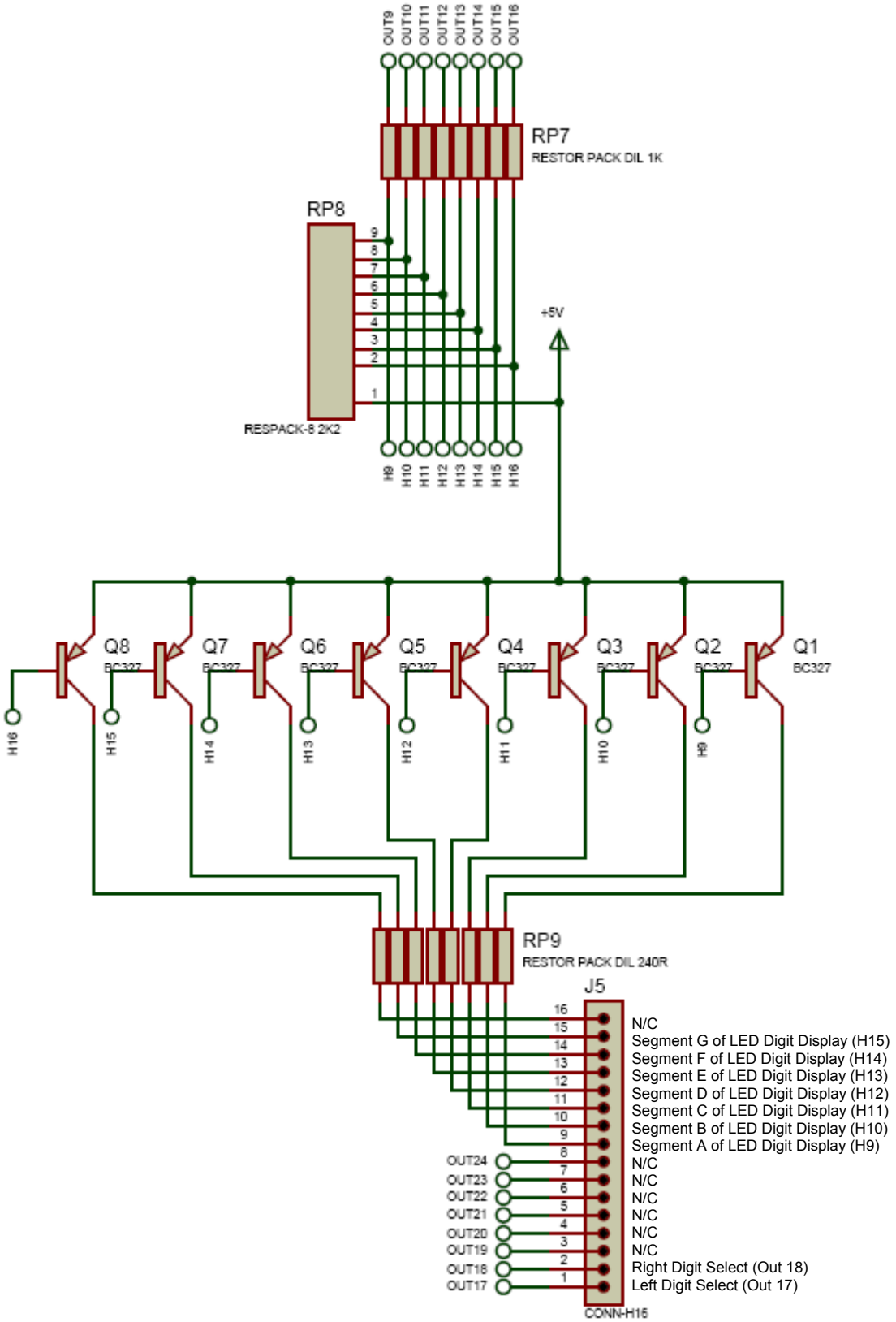

Service : DEVHC004 USB Connections for
Power, H-Bridge control, lamp, and counter outputs

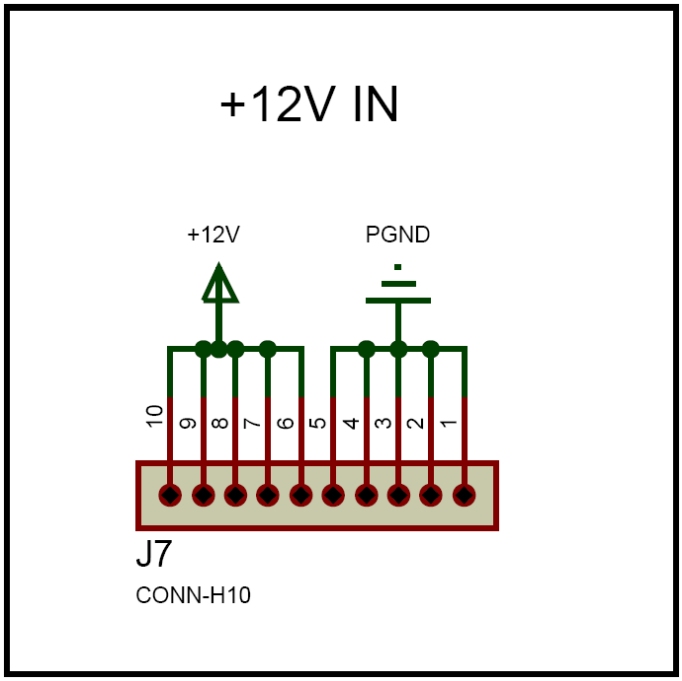

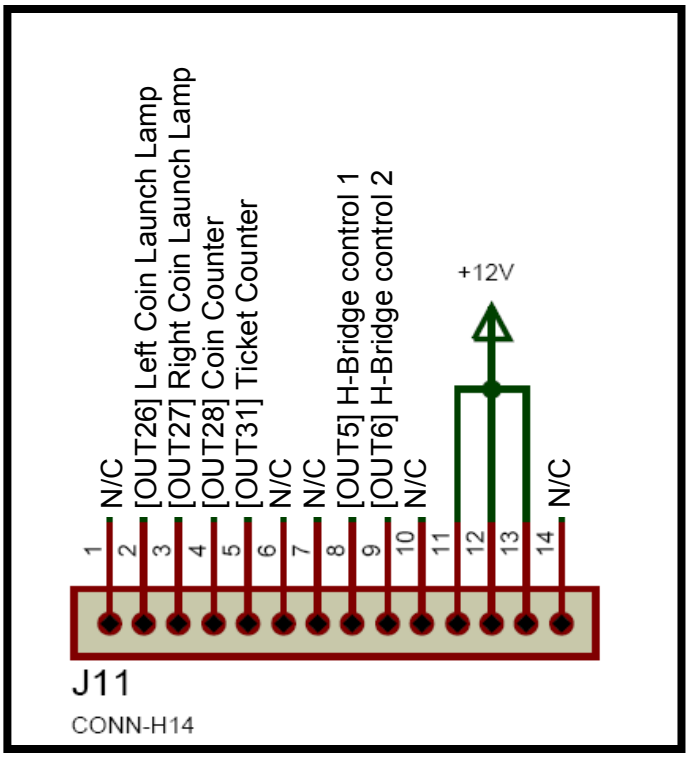

SERVICE: Theory of Operation and Repair

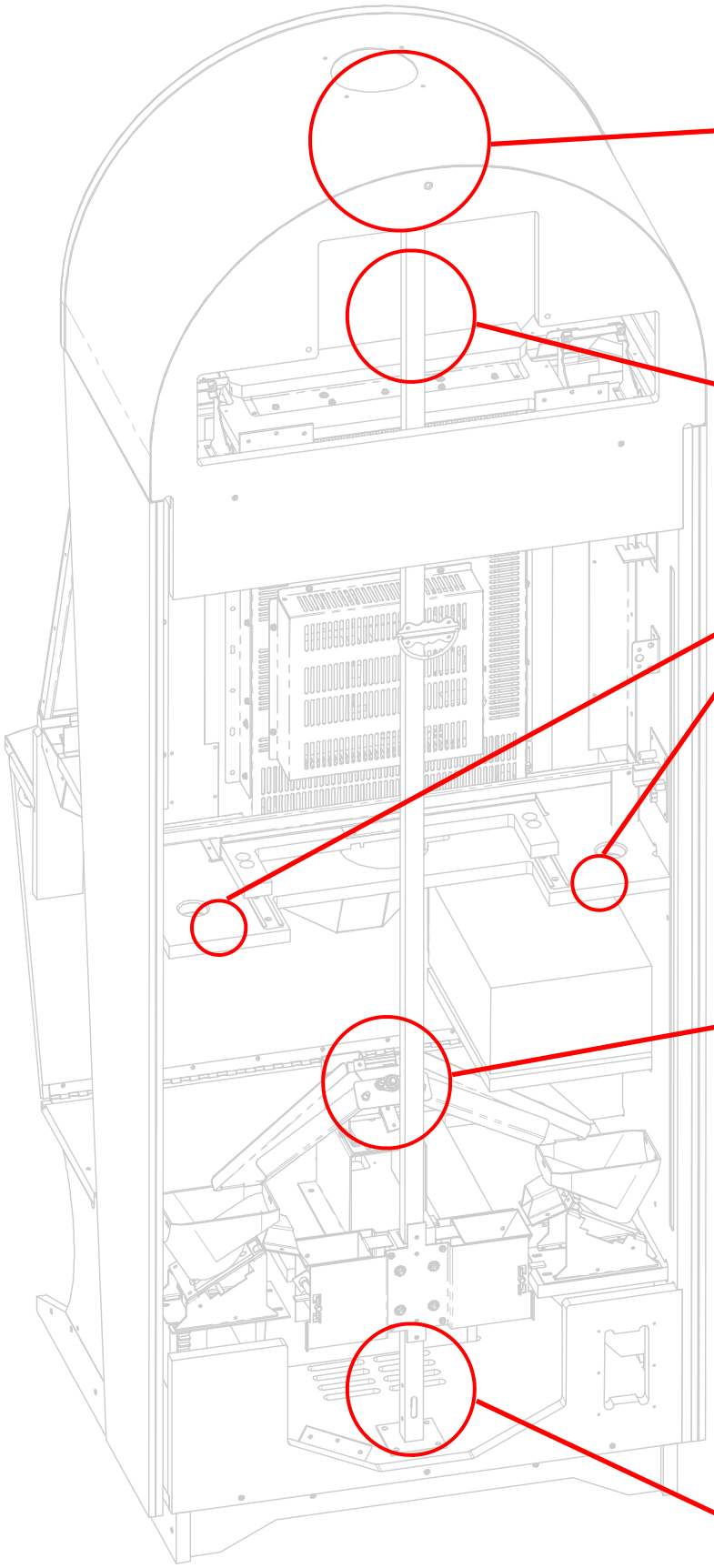

Elevator motor.

Upper elevator limit switches are located here. There function mirrors the lower limit switches.

Left switch will disable upper deck on playfield. Right switch will disable the elevator.

Diverter assembly. This solenoid is controlled by the serial I/O board. It is switched on and off by Q4.

Lower Elevator limit switches are located here. The wire pair Black with yellow strip and Black with blue strip are normally open. This should be tested with your meter set only to OHMS. When the elevator goes up, this will open. When the elevator returns to the bottom home position, this will be less than 1 ohm. If this fails the second pair of wires will open up and break the motor signal to the H-Bridge board.

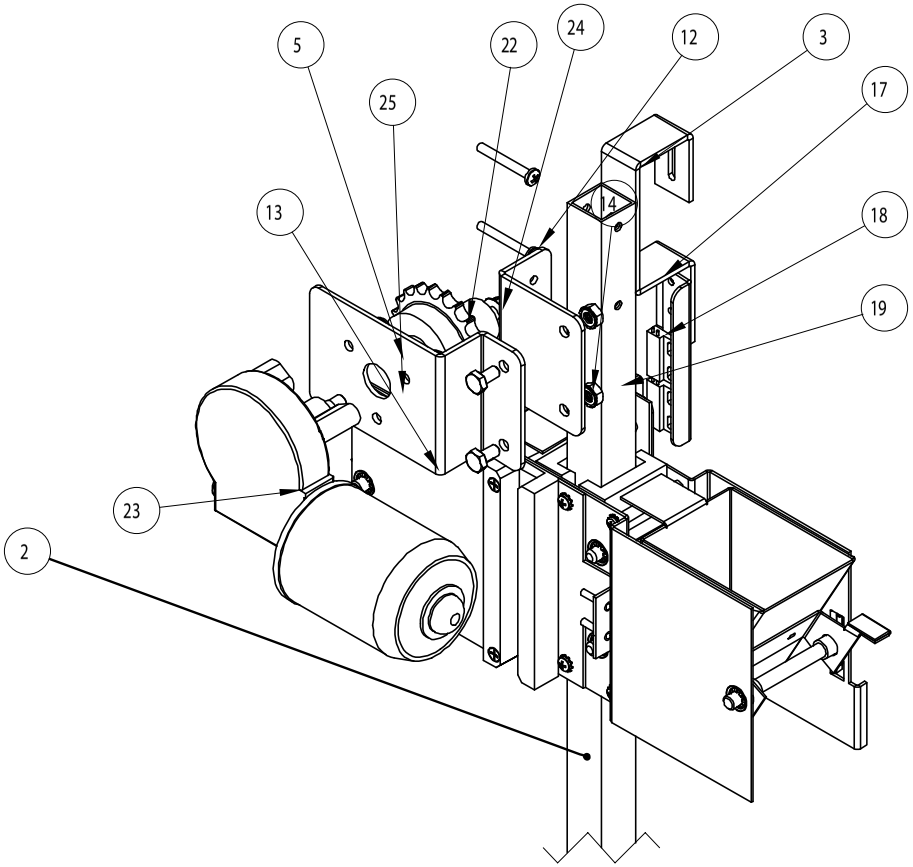

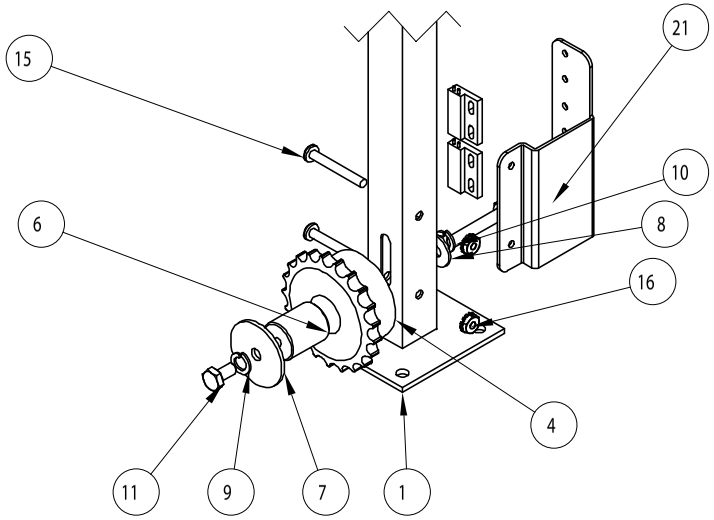

ITEM NO.	PART NUMBER	DESCRIPTION	QTY.
1	DS1024-1	ELEVATOR SHAFT MOUNTING PL ATE	1
2	DS1024-2	ELEVATOR SHAFT	1
3	DS1024-3	ELEVATOR SHAFT TOP B RACKET	1
4	DS1077	IDLER SP ROCKET	1
5	DS1078	DRIVE SP ROCKET	1
6	DS1050	IDLER SHAFT	1
7	6070	1/4 X 1-1/2 X .090 F -WASHER	1
8	6075	1/4 x 3/4 FL AT WASHER ZINC (USS)	1
9	6053	1/4" LOCK WASHER	2
10	PC60609	1/4-20 x 1-1/2" LG. (ZIN C)	1
11	6017	1/4-20 x 1/2 HHMB	3
12	DS1051	MOTOR B RACKET	1
13	DS1052	MOTOR FLANGE	1
14	PC60614	1/4-20 KEP NUT	2
15	6148	10-24 x 1-1/2" LG. PHMS	4
16	6040	10-24 KEP NUT	4
17	DS1053	UPPER SENSOR B RACKET	1
18	CG2012	SENSOR	4
19	DS1054	MAGNET MOUNT	2
20	CG2010	MAGNET	2
21	DS1055	LOWE R SENSOR MOUNT	1
22	DS1066	AD APTOR BUSHING	1
23	ELEVATOR DRIVE MOTOR	ELEVATOR M OTOR	1
24	Wexco Nut	FIXING NUT	1
25	Wexco Mounting Screw	MOTOR MOUNTING SCR EW	3
26	DS1025X	DUMP BUCK ET ASSEMBLY	1

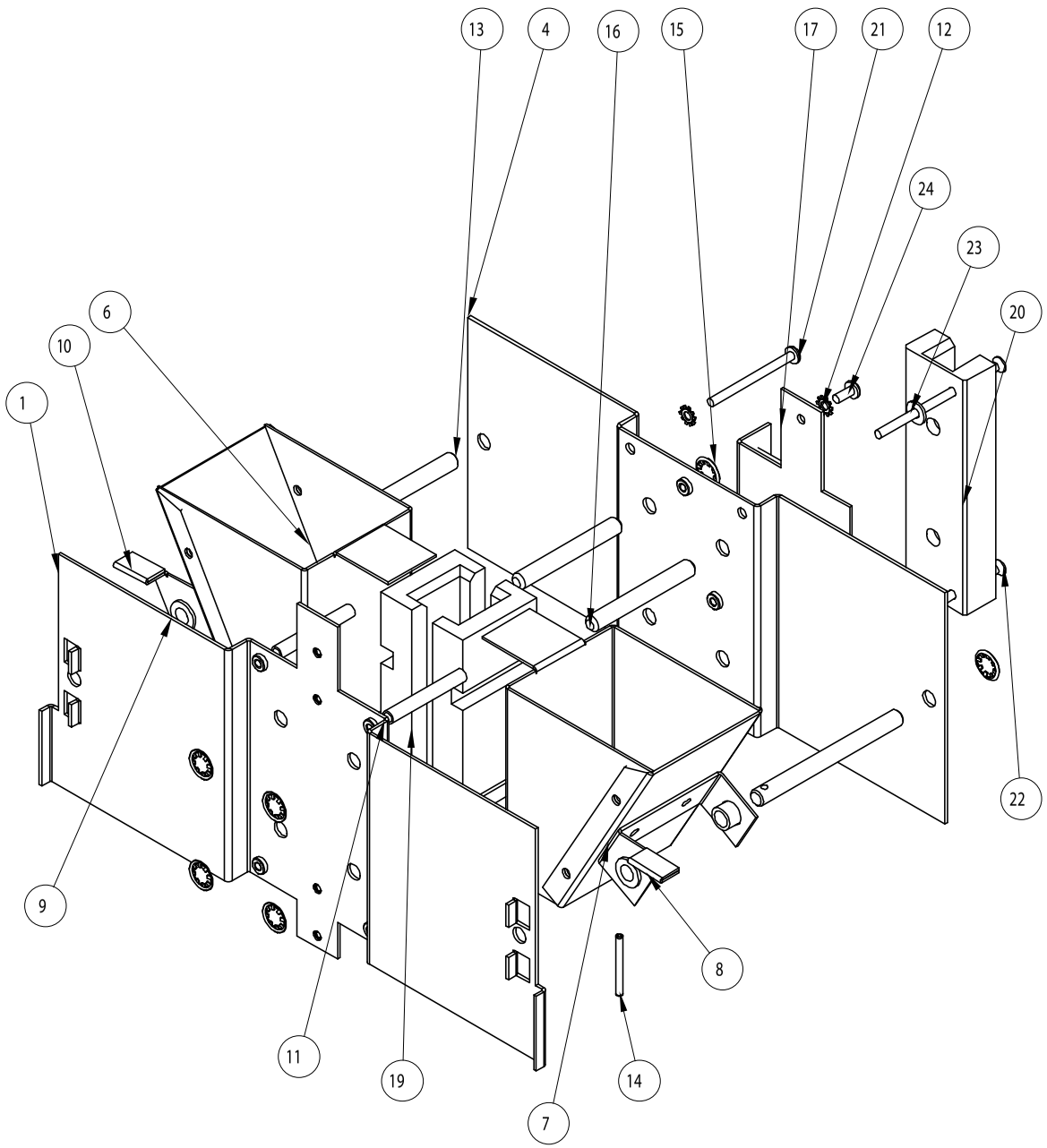

ITEM NO.	PART NUMBER	DESCRIPTION	QTY.
1	DS1025-1	PLATE	1
4	DS1026	PLATE	1
6	DS1027-1	BUCKET BODY	2
7	DS1027-2	BUCKET FRONT	2
8	DS1027-3	BUCKET HINGE	1
9	DS1088	BUSHING	4
10	DS1030-3	BUCKET HINGE	1
11	DS1067	SPACER	4
12	SK613	#8 STAR WASHER	4
13	DS1042	PIVOT PIN	2
14	DS1089	DS1089	2
15	DS1087	RETAINING RING	10
16	DS1043	ROLLER PIN	4
17	DS1034	CHAIN MOUNTING PLATE	1
19	DS3004	ELEVATOR GUIDE	2
20	DS3015	CHAIN GUIDE	1
21	6078	8-32 X 2 PHMS	2
22	6750	8-32 x .625 PFHMS	2
23	6031	#8 FLAT WASHER (ZINC)	2
24	6068	8-32 x 3/8 PHMS	2

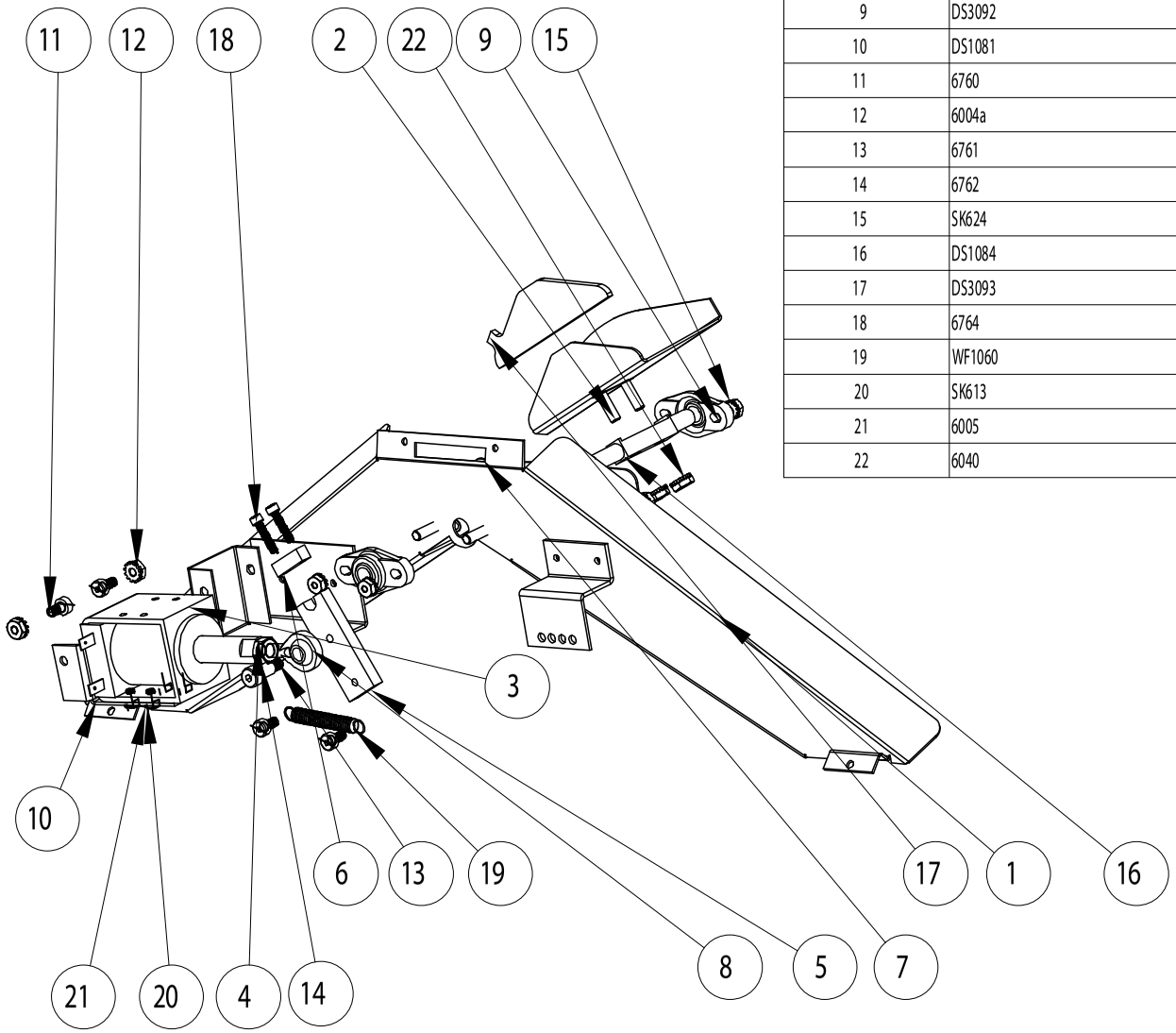

ITEM NO.	PART NUMBER	DESCRIPTION	QTY.
1	DS1068	DIVIDED CHUTE ASSEMBLY	1
2	DS1069	DIVERTER ASSEMBLY	1
3	CL2011	SOLENOID (GUARDIAN 4HD-C-12D)	1
4	DS1070	SOLENOID ARMATURE	1
5	DS1071	DIVERTER ARM	1
6	DS1075	RETAINING CAP	1
7	DS1074X	BEARING PLATE	1
8	DS3091	ROD END	1
9	DS3092	BEARING	2
10	DS1081	SOLENOID MOUNTING BRACKET	1
11	6760	SHOULDER SCREW	4
12	6004a	8-32 KEP NUT	3
13	6761	SHOULDER SCREW	1
14	6762	14-28 LOCKNUT	1
15	SK624	6-32 KEP NUT	6
16	DS1084	DIVERTER SHAFT	1
17	DS3093	DIVERTER LINER	1
18	6764	6-32 X 5/8 SHCS	2
19	WF1060	SPRING	1
20	SK613	#8 STAR WASHER	4
21	6005	8-32 X 1/4 PHMS	4
22	6040	10-24 KEP NUT	2

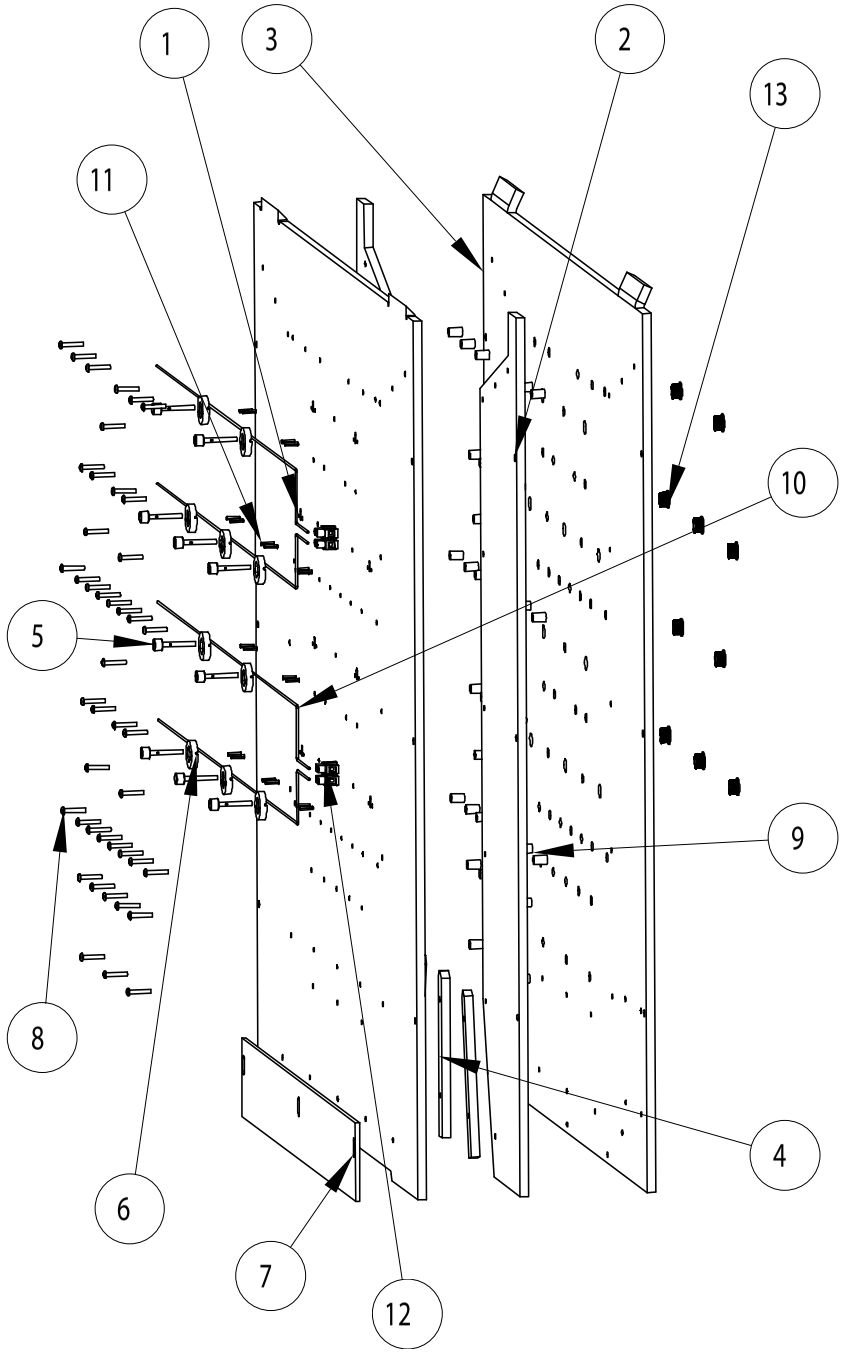

ITEM NO.	PART NUMBER	DESCRIPTION	QTY.
1	DS7016	PLAYFIELD HINGEPANEL	1
2	DS3006	PLAYFIELD SPACER	2
3	DS3007	PLAYFIELD SWITCH PANEL	1
4	DS3009	PLAYFIELD DIVIDER	3
5	DS1056	SWITCH MOVINGCONTACT	10
6	DS3010	HINGE BLOCK	10
7	DS3011	COIN LEVELER	1
8	6748	4-40 X 5/8 PBHMS	44
9	6747	SPACER 3/8 X 4-40THD	44
10	DS1079	ELEC. CONTACT HINGE PIN	4
11	6749	3/32 X 3/8 SSROLL PIN	20
12	2965	BARRIER STRIP SEGMENT	4
13	DS1009	SWITCH STATIONARY CONTACT	10

SERVICE

HARNESS ASSEMBLIES:

DS2050HX	Main Harness
DS2051LX	Coin Mech Harness
DS2052LX	Ticket dispenser Harness
DS2060HX	DC Power Harness
DS2062MX	Table Motor AC Harness
DS2063LX	Computer/Monitor Harness
DS2064MX	AC Lights/Fan Harness
DS2065LX	Monitor AC Harness
DS2075X	Time Delay Relay Harness
DS2076X	Lower/Count Hopper Extension Harness
DS2077X	Upper Hopper Extension Harness
DS2078X	PR Power Supply Harness
DS2079X	PCBA Power Harness
DS2080MX	Lower Hopper Harness
DS2081LX	Count Hopper Harness
DS2082HX	Upper Hopper Service Harness
DS2083LX	Speaker Harness
DS2084LX	Tilt/Slam Switch Harness

ELECTRICAL ASSEMBLIES

E02791DSX	Halogen Assembly
1029CLX	Reset Button Assembly
1029WSX	Reset Button Assembly
SX1013DSC	Toggle/reset buttons
2002	Time Delay AC Relay
CL2011	Solenoid for diverter
CR1050	Anti-Slam switch assembly
CV2032DSX	Display PCBA
DS2000	Deep Sea Treasure Computer
DS2010	24v 6.25Amp 12v 0.5 Amp Power supply
DS2030X	DEVHC008 Power Distribution PCBA
DS2034X	DEVHC004 USB Logic PCBA
DS2035X	Mini Logic V1.2 PCBA
DS2037X	DEVHC002 H-Bridge Motor controller PCBA
DS2036X	DEVHC003 USB Pin Sensor PCBA
E00599	USB A/B 6’ cable
E00600	SVGA 6’ M/M
E02247	9 pin serial cable
E02731	Audio Y adapter cable
EV2009	Audio power amplifier
HH5005CL	Ticket Dispenser
MON26EST	26” LCD monitor
PE1194X	Playfield motor assembly
RB2010	Power Supply
SX2007X	Power module assembly
DS2008X	Elevator motor

DECALS

DS7000	Door decal
DS7001	Patent decal
DS7002	Logo Ice Game Concepts decal
DS7003	Button Decal
DS7005	Inside panel left
DS7006	Inside panel right
DS7007	Playfield cover left
DS7008	Starfish decal
DS7009	Cover right decal
DS7010	Logo cabinet side decal
DS7012	Control panel decal
DS7013	Front Decal
DS7014	Instruction insert decal
DS9010	Monitor Bezel

MECHANICAL ASSEMBLIES:

DS1024X	Elevator assembly
DS7027X	Marquee Assembly
DS1002	Coin in Chute
DS3013	Wiper
DS3027	Cover Glass
DS5002EXT	SH400 Hopper Extension
DS5002B	SH400 Hopper 0.910-0.990
HR1013	Chain for ticket door
HR2005	Large Round White button
MS2364X	Fan Assembly
DS7016	Playfield

WARRANTY POLICY

I.C.E. Inc warrants all components in new machines to be free of defects in materials and workmanship for the period listed below:

- 180 days on Main PCB's, Computers & Motors
- 1 year on all LCD monitor panels
- 90 days on all other electronic and mechanical components
- 30 days on all I.C.E. repairs and parts purchases

I.C.E. Inc shall not be obligated to furnish a warranty request under the following conditions:

- Equipment or parts have failed through normal wear and tear
- Equipment has been subjected to unwarranted stress, abuse or neglect
- Equipment has been damaged as a result of arbitrary repair/modification

Products will only be covered under warranty by obtaining an I.C.E. authorized RMA #. To obtain an RMA # please provide I.C.E. tech support with the game serial # or original I.C.E. invoice # and a detailed description of the failure or fault symptoms.

I.C.E. Inc will assume no liability whatsoever for costs associated with labor or travel time to replace defective parts. All defective warranty covered components will be replaced with new or factory refurbished components equal to OEM specifications.

I.C.E. Inc will cover domestic UPS ground, or comparable shipping costs during the warranty period. International or expedited shipments are available for an additional charge. To obtain credit defective parts must be returned to I.C.E. Inc, at the customer's expense, within 30 days. After 30 days a 15% re-stocking fee will apply to all returns.

ICE distributors are independent, privately owned and operated. In their judgment, they may sell parts and/or accessories other than those manufactured by I.C.E. Inc. We cannot be responsible for the quality, suitability or safety of any non-I.C.E. part or modification (including labor) that is performed by such a distributor.

Innovative Concepts in Entertainment
10123 Main St.
Clarence, NY 14031
Phone #: (716) - 759 – 0360
Fax #: (716) – 759 – 0884
www.icegame.com